Operating Manual

SMA Home Storage

HS-BM-3.28-10

ENGLISH

HS-BM-3.28-10-BE-en-15 | Version 1.5

Legal Provisions

The information contained in these documents is the property of SMA Solar Technology AG. No part of this document may be reproduced, stored in a retrieval system, or transmitted, in any form or by any means, be it electronic, mechanical, photographic, magnetic or otherwise, without the prior written permission of SMA Solar Technology AG. Internal reproduction used solely for the purpose of product evaluation or other proper use is allowed and does not require prior approval.

SMA Solar Technology AG makes no representations or warranties, express or implied, with respect to this documentation or any of the equipment and/or software it may describe, including (with no limitation) any implied warranties of utility, merchantability, or fitness for any particular purpose. All such representations or warranties are expressly disclaimed. Neither SMA Solar Technology AG nor its distributors or dealers shall be liable for any indirect, incidental, or consequential damages under any circumstances.

The exclusion of implied warranties may not apply in all cases under some statutes, and thus the above exclusion may not apply.

Specifications are subject to change without notice. Every attempt has been made to make this document complete, accurate and up-to-date. Readers are cautioned, however, that product improvements and field usage experience may cause SMA Solar Technology AG to make changes to these specifications without advance notice or per contract provisions. SMA Solar Technology AG shall not be responsible for any damages, including indirect, incidental or consequential damages, caused by reliance on the material presented, including, but not limited to, omissions, typographical errors, arithmetical errors or listing errors in the content material.

SMA Warranty

You can download the current warranty conditions from the Internet at www.SMA-Solar.com.

Trademarks

All trademarks are recognized, even if not explicitly identified as such. Missing designations do not mean that a product or brand is not a registered trademark.

SMA Solar Technology AG

Sonnenallee 1

34266 Niestetal

Germany

Tel. +49 561 9522-0

Fax +49 561 9522-100

www.SMA.de

E-mail: info@SMA.de

Status: Friday, April 4, 2025

Copyright © 2025 SMA Solar Technology AG. All rights reserved.

Table of contents

1 Information on this Document ... 6
1.1 Validity ... 6
1.2 Target Group ... 6
1.3 Content and Structure of this Document ... 6
1.4 Levels of Warning Messages ... 6
1.5 Symbols in the Document ... 7
1.6 Typographies in the document ... 7
1.7 Designations in the Document ... 7
1.8 Additional Information ... 7

2 Safety ... 9
2.1 Intended Use ... 9
2.2 Important Safety Information ... 9

3 Scope of Delivery ... 14
3.1 Scope of delivery of battery modules ... 14
3.2 Scope of Delivery: Base (Optional) ... 15
3.3 Scope of Delivery: Cover (Optional) ... 15

4 Product overview ... 16
4.1 System Overview ... 16
4.2 Product Description ... 17
4.3 Symbols on the Product ... 17
4.4 Interfaces and Functions ... 19
4.4.1 RJ45 connection ... 19
4.4.2 User Interface ... 19
4.4.3 Increased self-consumption ... 19
4.4.4 Black start ... 19
4.5 LED signals of the battery modules ... 19
4.6 Battery Management ... 20
4.7 Modular extension of the battery modules ... 21

5 Transport ... 22

6 Mounting ... 23
6.1 Requirements for Mounting ... 23
6.1.1 Requirements for the installation site of the battery modules ... 23
6.1.2 Permitted and prohibited mounting positions of the battery modules ... 23
6.1.3 Recommended clearances ... 23
6.2 Wall Mounting ... 24
6.2.1 Wall mounting variants ... 24
6.2.2 Dimensions for wall mounting ... 25
6.2.3 Mount the battery modules with wall mounting bracket ... 25
6.3 Mounting with base ... 28
6.3.1 Mounting variants when mounting with base ... 28
6.3.2 Dimensions for mounting with base ... 29
6.3.3 Mounting the battery modules with base ... 29
6.4 Back-to-back ... 32
6.4.1 Mounting variants of the back-to-back ... 32
6.4.2 Mounting dimensions for the back-to-back ... 32
6.4.3 Mounting back-to-back ... 33

7 Electrical Connection ... 35
7.1 Overview of the Connection Area ... 35
7.2 Circuitry overview with Sunny Boy Smart Energy ... 36
7.3 Circuitry overview with Sunny Tripower Smart Energy ... 37
7.4 Requirements for the electrical connection ... 37
7.4.1 Grounding cable requirements ... 37
7.4.2 DC cable requirements ... 37
7.4.3 Battery data cable requirements ... 38
7.5 Electrical Connection Procedure ... 38
7.6 Grounding the Battery ... 38
7.7 Connecting the battery data cable between the battery modules ... 39
7.8 Connection overview of the battery communication with the inverter ... 41
7.9 Connecting the battery communication system to the inverter ... 42
7.10 Connecting the DC Cables ... 43
8 Commissioning ... 45
8.1 Commissioning Procedure ... 45
8.2 Checking the Mounting and Connection Work ... 45
8.3 Commissioning the battery modules ... 45
8.4 Checking the configuration of the battery modules on the user interface of the inverter ... 47
9 Disconnecting the battery modules from voltage sources ... 48
10 Cleaning ... 49
11 Troubleshooting ... 50
11.1 Options for troubleshooting ... 50
11.2 Event messages on the user interface of the inverter ... 50
11.3 Error with LED display only ... 62
11.4 External appearance of the battery module ... 62
12 Installation of an additional battery module ... 63
13 Receipt of a Replacement Device ... 64
13.1 Procedure for Receiving a Replacement Device ... 64
13.2 Removing a Battery Module ... 64
13.3 Bring the battery modules to a state of charge of 30% ... 64
13.4 Installing a Battery Module ... 65
14 Decommissioning the battery modules ... 66
15 Storage ... 67
15.1 Climatic requirements for the storage location ... 67
15.2 Procedure in case of fire ... 67
16 Disposal ... 68
16.1 Critical and non-critical battery modules ... 68
16.2 Providers for the disposal of batteries ... 68
16.3 Specifications for Battery Disposal ... 68
16.4 Reporting damaged battery ... 69
16.5 Disposing of the Battery ... 69
17 Technical Data ... 70
17.1 General Data ... 70

17.2 Equipment 70
17.3 DC connection 71
17.4 Efficiency 71
17.5 Protective Devices 71
17.6 Climatic Conditions 71

18 Accessories 73

19 EU Declaration of Conformity 74

20 UK Declaration of Conformity 75

21 Contact 76

1 Information on this Document

1.1 Validity

This document is valid for:

- HS-BM-3.28-10 (SMA Home Storage 3.2)
- HS-BU-10 (SMA Home Storage Base Unit)

1.2 Target Group

The tasks described in this document must only be performed by qualified persons. Qualified persons must have the following skills:

This document is intended for qualified persons and end users. Only qualified persons are allowed to perform the activities marked in this document with a warning symbol and the caption "Qualified person". Tasks that do not require any particular qualification are not marked and can also be performed by end users. Qualified persons must have the following skills:

- Knowledge of how an inverter works and is operated
- Knowledge of how batteries work and are operated
- Training to deal with risks associated with installing, repairing, and using electrical devices, inverters, and batteries
- Training in the installation and commissioning of electrical devices and installations
- Knowledge of all applicable laws, regulations, standards, and directives
- Knowledge of and compliance with this document and all safety information

1.3 Content and Structure of this Document

This document describes the mounting, installation, commissioning, configuration, operation, troubleshooting and decommissioning of the product.

The latest version of this document and additional information about the product can be found in PDF format and as an eManual at www.SMA-Solar.com. You can also call up the eManual via the user interface of the product.

Illustrations in this document are reduced to the essential information and may deviate from the real product.

1.4 Levels of Warning Messages

The following levels of warning messages may occur when handling the product.

⚠ DANGER
Indicates a hazardous situation which, if not avoided, will result in death or serious injury.

⚠ WARNING
Indicates a hazardous situation which, if not avoided, could result in death or serious injury.

⚠ CAUTION
Indicates a hazardous situation which, if not avoided, could result in minor or moderate injury.

NOTICE
Indicates a situation which, if not avoided, can result in property damage.

1.5 Symbols in the Document

Symbol	Explanation
i	Information that is important for a specific topic or goal, but is not safety-relevant
☐	Indicates a requirement for meeting a specific goal
☑	Required result
	Example
⚠ QUALIFIED PERSON	Sections describing activities to be performed by qualified persons only

1.6 Typographies in the document

Typography	Use	Example
bold	• Messages • Terminals • Elements on a user interface • Elements to be selected • Elements to be entered	• Connect the insulated conductors to the terminals **X703:1** to **X703:6**. • Enter **10** in the field **Minutes**.
>	• Connects several elements to be selected	• Go to **Settings > Date**.
[**Button**] [**Key**]	• Button or key to be selected or pressed	• Select [**Enter**].
#	• Placeholder for variable components (e.g., parameter names)	• Parameter **WCtlHz.Hz#**

1.7 Designations in the Document

Complete designation	Designation in this document
SMA Home Storage 3.28 kWh module	SMA Home Storage, battery module, battery, battery system, product
SMA Home Storage Base Unit	Base
Sunny Boy Smart Energy Sunny Tripower Smart Energy	Hybrid inverter, inverter
SMA Home Storage Top Cover	Cover for the top battery module

1.8 Additional Information

Additional information is available at www.SMA-Solar.com.

Title and information content	Type of information
"SMA HOME STORAGE - Safety Information"	Technical Information

Title and information content	Type of information
SUNNY BOY SMART ENERGY 3.6 / 4.0 / 5.0 / 6.0 Mounting, installation, commissioning, configuration, operation, troubleshooting and decommissioning	Operating manual
SUNNY BOY SMART ENERGY "Approved Batteries and Information on Battery Communication Connection"	Technical Information
SUNNY TRIPOWER 5.0 / 6.0 / 8.0 / 10.0 SMART ENERGY Mounting, installation, commissioning, configuration, operation, troubleshooting and decommissioning	Operating manual
SUNNY TRIPOWER SMART ENERGY "Approved Batteries and Information on Battery Communication Connection"	Technical Information
"SMA Smart Home"	Planning guidelines

2 Safety

2.1 Intended Use

SMA Home Storage is a system from one or several battery modules and can be used in the SMA Home Storage Solution for home applications, including for increased self-consumption.

The communication interface of the inverter used must be compatible with the product. The entire voltage range must be completely within the permissible input voltage range of the inverter. The maximum permissible DC input voltage of the product must not be exceeded.

No additional loads or components in the DC connection may be connected between the battery and inverter.

The product is suitable for indoor and outdoor use.

The product must only be used as stationary equipment.

All components must remain within their permitted operating ranges and their installation requirements at all times.

The product is not suitable for supplying life-sustaining medical devices. A power outage must not lead to personal injury.

The product must only be used in countries for which it is approved or released by SMA Solar Technology AG and the grid operator.

The products by SMA Solar Technology AG are not suitable for use in

- Medical devices, in particular products for supplying life-support systems and machines,
- Aircraft, the operation of aircraft, the supply of critical airport infrastructure and airport systems,
- Rail vehicles, the operation and supply of rail vehicles and their critical infrastructure.

The above list is not exhaustive. Contact us if you are unsure whether products by SMA Solar Technology AG are suitable for your application.

Use SMA products only in accordance with the information provided in the enclosed documentation and with the locally applicable laws, regulations, standards and directives. Any other application may cause personal injury or property damage.

The documentation must be strictly followed. Deviations from the described actions and the use of materials, tools, and aids other than those specified by SMA Solar Technology AG are expressly forbidden.

Alterations to the SMA products, e.g., changes or modifications, are only permitted with the express written permission of SMA Solar Technology AG. Unauthorized alterations as well as failure to observe the documentation will void guarantee and warranty claims and in most cases terminate the operating license. SMA Solar Technology AG shall not be held liable for any damage caused by such changes.

Any use of the product other than that described in the Intended Use section does not qualify as appropriate.

The documentation supplied is an integral part of SMA products. Keep the documentation in a convenient, dry place for future reference and observe all instructions contained therein.

This document does not replace any regional, state, provincial, federal or national laws, regulations or standards that apply to the installation, electrical safety and use of the product. SMA Solar Technology AG assumes no responsibility for the compliance or non-compliance with such laws or codes in connection with the installation of the product.

The type label must remain permanently attached to the product.

2.2 Important Safety Information

Keep the manual for future reference.

This section contains safety information that must be observed at all times when working.

The product has been designed and tested in accordance with international safety requirements. As with all electrical or electronical devices, some residual risks remain despite careful construction. To prevent personal injury and property damage and to ensure long-term operation of the product, read this section carefully and observe all safety information at all times.

⚠ DANGER

Danger to life due to electric shock when live components or DC cables are touched

The DC cables connected to a battery may be live. Touching live DC cables results in death or serious injury due to electric shock.

- Disconnect the product and inverter from voltage sources and make sure they cannot be reconnected before working on the device.
- Do not touch non-insulated parts or cables.
- Do not disconnect the DC connectors under load.
- Wear suitable personal protective equipment for all work on the product.

⚠ DANGER

Danger to life due to electric shock when touching live enclosure parts with damaged grounding conductor

High voltages may be applied to the enclosure of the product if the grounding conductor of the DC connection is damaged or has not been connected correctly. Touching live enclosure parts results in death or lethal injuries due to electric shock.

- Connect the grounding conductor for the DC connection as described in this document.

⚠ DANGER

Danger to life due to fire or explosion due to improper handling of the battery modules

Improper handling can cause the lithium inside the battery to ignite. This can cause a fire or explosion. Death or lethal injuries due to hot or flying debris can result.

- Never use defective or damaged battery modules.
- Do not open, pierce, or drop battery modules.
- Do not install or operate the battery modules in potentially explosive atmospheres or areas of high humidity.
- Do not expose the battery modules to high temperatures.
- Never throw the battery modules into a fire.
- Store the battery modules dry and within the specified temperature range.
- If a fire starts from the battery, contact the fire department. Extinguishing is a high risk due to toxic gases, risk of explosion and rapid spread.
- If a fire breaks out in the vicinity of the battery, use an ABC fire extinguisher.

⚠ DANGER

Danger to life due to electric shock when touching live system components in case of a ground fault

If a ground fault occurs, parts of the system may still be live. Touching live parts and cables results in death or lethal injuries due to electric shock.

- Disconnect the product and inverter from voltage sources and make sure they cannot be reconnected before working on the device.

⚠ DANGER

Danger to life due to electric shock when live components are touched on opening the product

High voltages are present in the live parts and cables inside the product during operation. Touching live parts and cables results in death or lethal injuries due to electric shock.

- Do not open the product.

⚠ WARNING

Danger to life due to electric shock from destruction of the measuring device due to overvoltage

Overvoltage can damage a measuring device and result in voltage being present in the enclosure of the measuring device. Touching the live enclosure of the measuring device results in death or lethal injuries due to electric shock.

- Only use measuring devices with a DC input voltage range of 1000 V or higher.

⚠ WARNING

Danger to life due to burns caused by electric arcs through short-circuit currents

Short-circuit currents in the battery can cause heat build-up and electric arcs. Heat build-up and electric arcs may result in lethal injuries due to burns.

- Disconnect the battery from all voltages sources prior to performing any work on the battery.
- Remove watches, rings and other metal objects prior to carrying out any work on the battery.
- Use insulated tools and wear insulated gloves for all work on the battery.
- Do not place tools or metal parts on the battery.

⚠ WARNING

Danger to life due to fire or explosion when batteries are fully discharged

A fire may occur due to incorrect charging of fully discharged batteries. This can result in death or serious injury.

- Put the battery into operation no longer than twelve months after production or six month after conditioning.
- If the battery cannot be put into operation within twelve months after production or six months after conditioning, request reconditioning of the battery.
- Before commissioning the system, verify that the battery is not fully discharged.
- Do not commission the system if the battery is fully discharged.
- If the battery is fully discharged, contact Service.

⚠ WARNING

Risk of injury due to toxic substances, gases and dusts.

In rare cases, damages to electronic components can result in the formation of toxic substances, gases or dusts inside the product. Touching toxic substances and inhaling toxic gases and dusts can cause skin irritation, burns or poisoning, trouble breathing and nausea.

- Protect the battery enclosure against destruction.
- Do not open or deform the battery.
- Do not throw batteries into fire. Batteries may explode in fire.
- Only perform work on the battery (e.g., troubleshooting, repair work) when wearing personal protective equipment for handling of hazardous substances (e.g., safety gloves, eye and face protection, respiratory protection).
- Rinse acid splashes thoroughly for a long time with clear water, and consult a doctor.
- If acid fumes have been inhaled, consult a doctor immediately.
- Ensure that unauthorized persons have no access to the product.
- Install, operate, maintain and dispose of the battery according to the manufacturer's specifications.

⚠ WARNING

Risk of injury due to weight of product

Injuries may result if the battery modules are lifted incorrectly or dropped while being transported or mounted.

- Transport and lift the product carefully. Take the weight of the product into account.
- Transport the product individually only.
- Always have several persons transport and mount the product. The number of persons depends on the locally applicable standards and directives.
- Use suitable means of transport, e.g. a dolly. Do not damage the enclosure of the battery components.
- Wear suitable personal protective equipment, at a minimum safety footwear with a non-slip sole and steel cap, for all work on the product.

⚠ CAUTION

Risk of burns due to hot battery modules

The battery module can get hot during operation. Touching hot battery modules can cause burns.

- Before touching the battery modules, wait until the battery modules have cooled down.

⚠ CAUTION

Risk of injury due to sharp edges

The battery components contain sheet metal parts with sharp edges. Touching the sharp-edged sheet metal parts may result in injuries.

- Wear safety gloves for mounting and disassembling the battery.

NOTICE

Damage to the battery modules due to moisture or corrosive substances

Moisture or corrosive substance penetration can damage the product and impair its functionality.

- Do not immerse battery modules in liquid.
- Do not expose battery cells to corrosive substances (e.g., ammonia, salt).

NOTICE

Damage to the product due to cleaning agents

The use of cleaning agents may cause damage to the product and its components.

- Clean all battery components with a dry cloth only.

3 Scope of Delivery

3.1 Scope of delivery of battery modules

Check the scope of delivery for any externally visible damage. If visible damages are detected, document the damaged areas and immediately inform SMA Solar Technology AG. Never commission the battery if components are damaged.

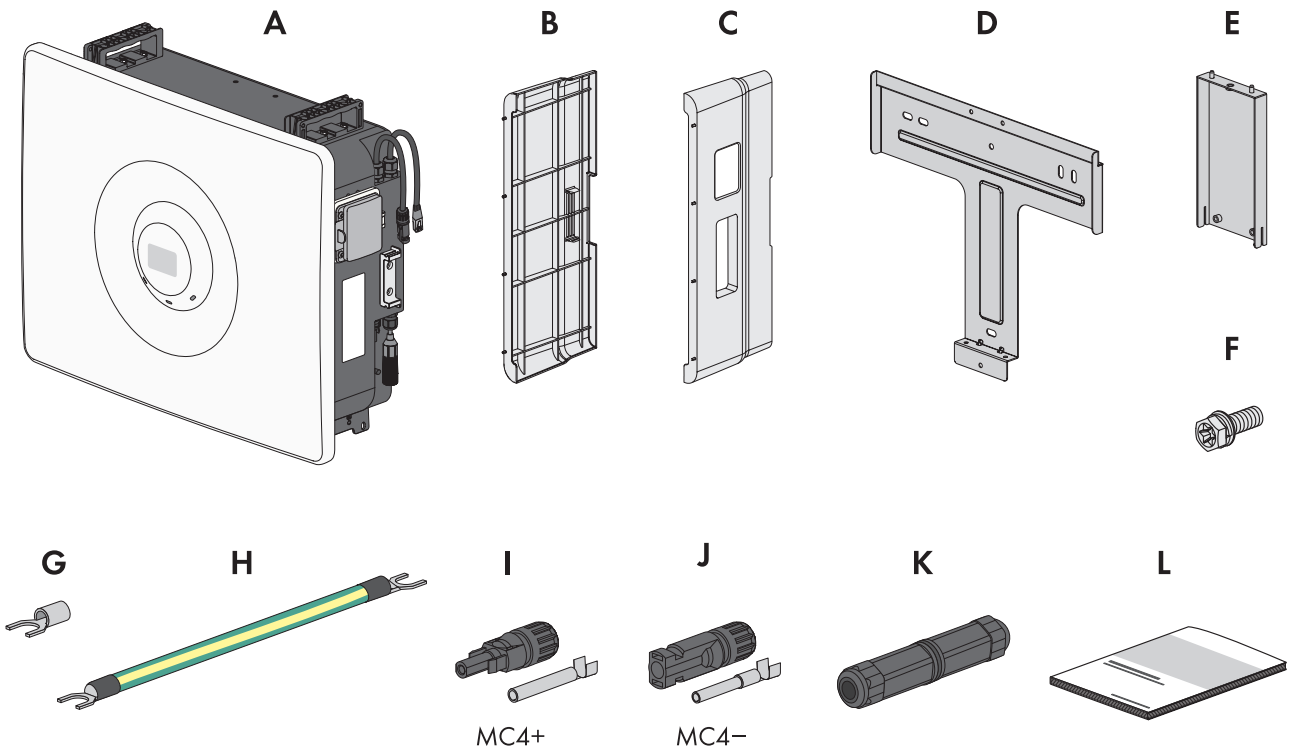

Figure 1: Components included in scope of delivery

Position	Quantity	Designation
A	1	Battery enclosure including cables for connecting more battery modules
B	1	Left side cover
C	1	Right side cover
D	1	Wall mounting bracket
E	1	Connecting element of two wall mounting brackets
F	6	Screw and washer assembly M5x12
G	2	Terminal lugs M5 for the connection of several modules with longer grounding cable
H	1	Grounding cables between the battery modules, cross-section 6 mm² with terminal lugs M5
I	1	Positive MC4 connector by Stäubli
J	1	Negative MC4 connector by Stäubli

Position	Quantity	Designation
K	1	RS45 cable connector for connecting the communication cable (suitable for indoor and outdoor installation)
L	1	Quick Reference Guide

3.2 Scope of Delivery: Base (Optional)

Check the scope of delivery for any externally visible damage. If visible damages are detected, document the damaged areas and immediately inform SMA Solar Technology AG. Never commission the battery system if components are damaged.

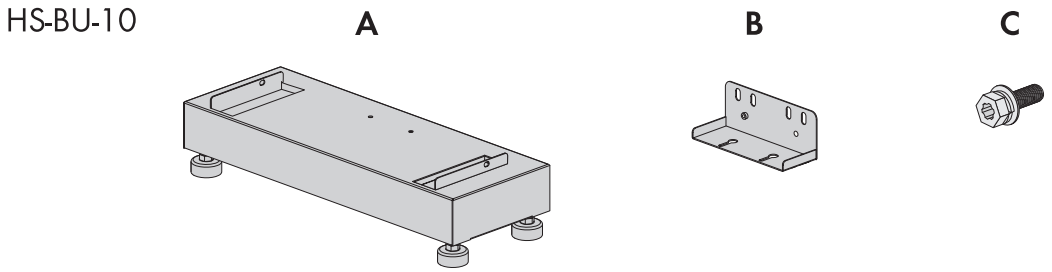

Figure 2: Components included in scope of delivery

Position	Quantity	Designation
A	1	Base with 4 adjustable feet
B	2	Fixing bracket
C	6	Screw and washer assembly M5x12

3.3 Scope of Delivery: Cover (Optional)

Check the scope of delivery for any externally visible damage. If visible damages are detected, document the damaged areas and immediately inform SMA Solar Technology AG. Never commission the battery system if components are damaged.

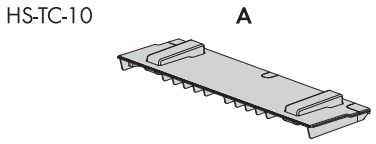

Figure 3: Included in the scope of delivery

Position	Quantity	Designation
A	1	Cover for the top battery module

4 Product overview

4.1 System Overview

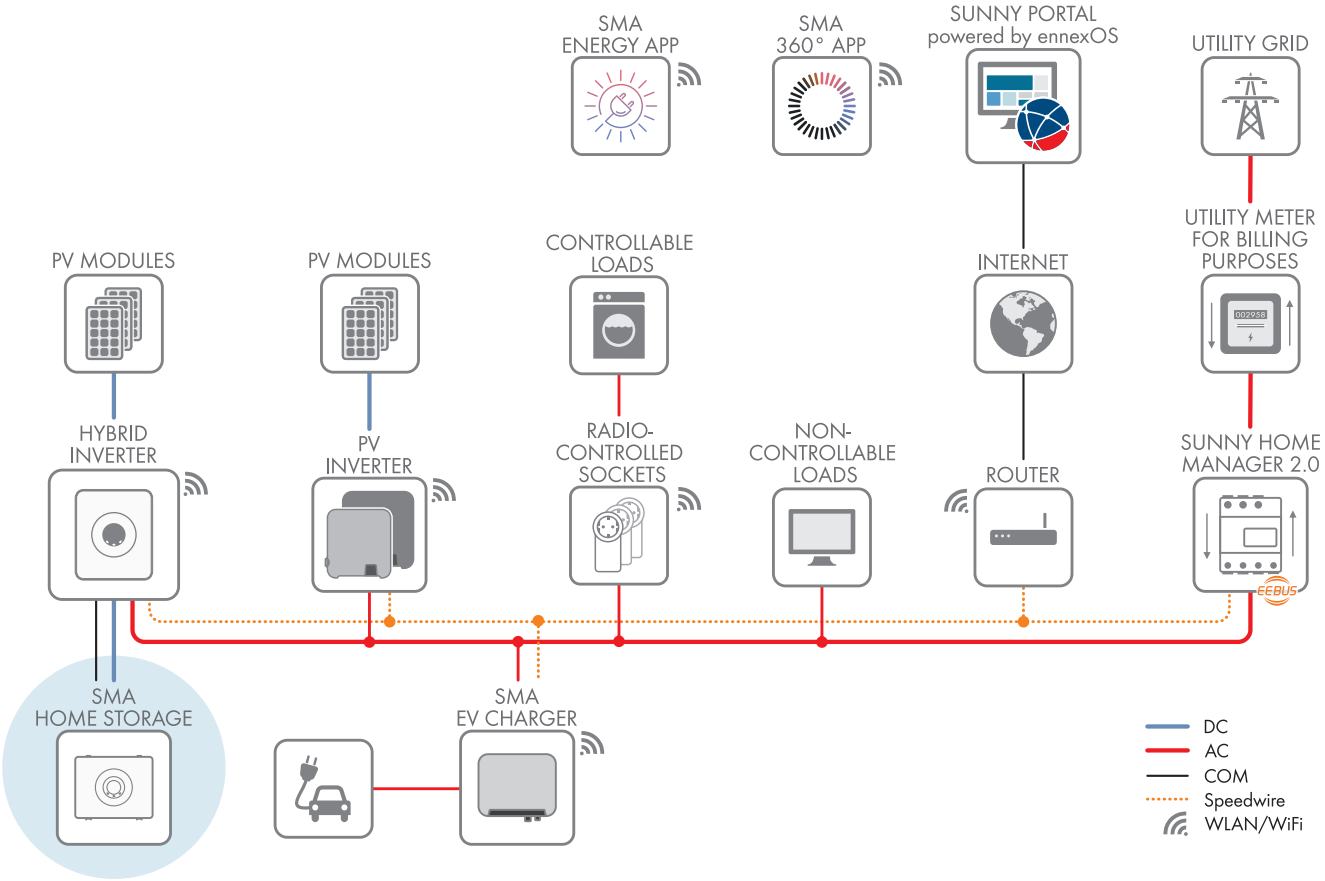

Figure 4: Design of the system (example)

4.2 Product Description

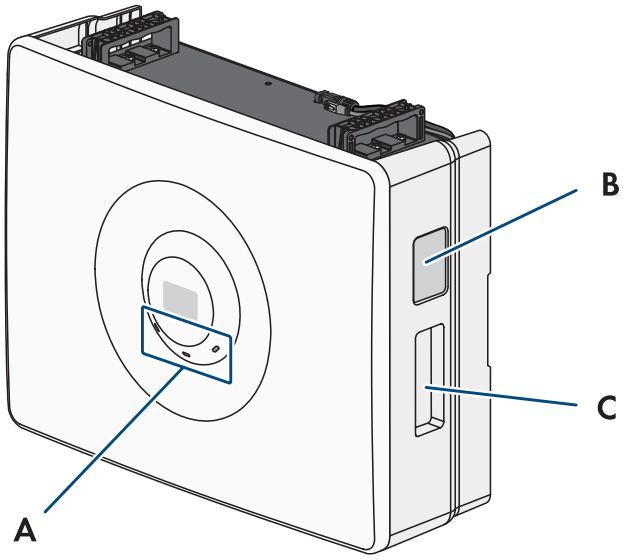

Figure 5: Design of the product

Position	Designation
A	LEDs The LEDs indicate the operating state of the product.
B	DC switch Disconnects the product from the power path on the DC side.
C	Type label The type label clearly identifies the product. The type label must remain permanently attached to the product. You will find the following information on the type label: • Device type (Model) • Serial number (Serial No. or S/N) • Date of manufacture • Device-specific characteristics

4.3 Symbols on the Product

Symbol	Explanation
	Beware of a danger zone This symbol indicates that the product must be additionally grounded if additional grounding or equipotential bonding is required at the installation site.
	Beware of electrical voltage The product operates at high voltages.
	Warning of hazards from batteries This symbol indicates the danger of handling batteries.

Symbol	Explanation
	Potentially explosive substances warning Improper handling or fire can cause the product to ignite or explode.
	Corrosive substances warning The product contains corrosive substances that can cause severe injury if they come into direct contact with the skin.
	Observe the documentations Observe all documentations supplied with the product.
	Use eye protection Wear eye protection for all work on the device.
	No open flame Handling an open flame and sources of ignition is forbidden in the immediate vicinity of the product.
	Access is prohibited for all children Children must be kept at a safe distance from the product.
	Recycle the entire battery system including all components.
	WEEE designation Do not dispose of the product together with the household waste but in accordance with the disposal regulations for electronic waste applicable at the installation site.
	The product is suitable for outdoor installation.
IP65	Degree of protection IP65 The product is protected against the penetration of dust and water that is directed as a jet against the enclosure from all directions.
CE	CE marking The product complies with the requirements of the applicable EU directives.
UK CA	UKCA marking The product complies with the regulations of the applicable laws of England, Wales and Scotland.
RoHS	RoHS labeling The product complies with the requirements of the applicable EU directives.
	RCM (Regulatory Compliance Mark) The product complies with the requirements of the applicable Australian standards.

4.4 Interfaces and Functions

4.4.1 RJ45 connection

The battery is equipped with an RJ45 terminal as standard. The battery can communicate via cables with SMA inverters via this RJ45 terminal (information on supported SMA products at www.SMA-Solar.com). For the communicative connection of Sunny Tripower Smart Energy, a pre-assembled communication cable is recommended (see Technical Information "Approved Batteries and Information on Battery Communication Connection" of the SUNNY BOY SMART ENERGY).

4.4.2 User Interface

The product is controlled by an inverter and is integrated into the user interface of the inverter.

4.4.3 Increased self-consumption

With increased self-consumption, the highest possible proportion of the power of a generator (e.g., a PV system) is stored and consumed at the place where it is generated. With increased self-consumption, power output and power consumption at the point of interconnection are reduced.

The SMA Home Storage Solution supports the increased self-consumption through intermediate storage of energy from generators.

4.4.4 Black start

A black start is the startup of an energy supply system after a grid failure. With this black start, the energy supply system uses internal energy reserves and is therefore independent of external energy sources.

The product supports a black start in conjunction with an inverter with battery-backup function and black start capacity. If the energy supply from the utility grid and the PV system fails at the same time, a black start can be triggered manually using the DC switch on the product.

4.5 LED signals of the battery modules

The LEDs indicate the operating state of the battery modules.

LED signal	Explanation
The green LED is flashing (2 s on and 2 s off)	Waiting for valid operating conditions The conditions for charging and discharge mode are not yet met. As soon as the conditions are met, the battery will start charging and discharging.
The green LED is glowing	Charge and discharge mode The battery charges or discharges in current-controlled operation.
The green LED is off	No battery voltage
The red LED is glowing	Error Operation of the battery has been stopped. In addition, a distinct event message and the corresponding event number will be displayed on the inverter user interface or in the communication product (e.g., SMA Data Manage or Sunny Home Manager).
Red LED is flashing (0.25 s on, 0.25 s off)	Alarm event regarding temperature or voltage An alarm was triggered during operation. The battery keeps running, but the cause should be checked.
Red LED is flashing (0.25 s on, 1.25 s off)	Internal battery alarm An alarm was triggered during operation. The battery keeps running, but the cause should be checked.

LED signal	Explanation
The blue LED is flashing slowly (2 seconds on and 2 seconds off)	Communication connection is being established. The battery is establishing a connection with the connected inverter.
The blue LED is glowing	There is an active connection to the connected inverter.
Blue LED is off	There is no active connection.
All 3 LEDs are on	Battery update or booting procedure

4.6 Battery Management

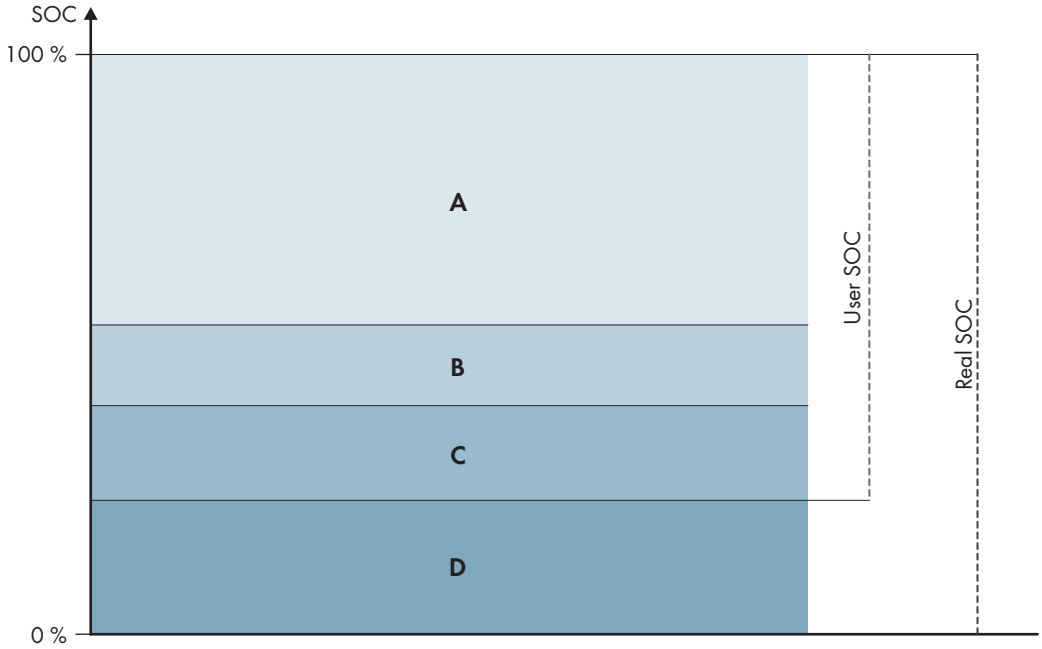

Figure 6: State of charge ranges of the battery

Range	Inverter parameters	Inverter behavior
A	-	The inverter uses the battery within this range for increased self-consumption. When more energy is needed than can be supplied by the PV modules, the battery is discharged.
B	**Battery > Areas of application > Minimum width of backup power area (BatUsDm.BckDmMin)**	The value indicates the percentage of battery charge to be retained for battery-backup operation. This battery charge cannot be used in parallel grid operation, even if the battery-backup operation is deactivated.

Range	Inverter parameters	Inverter behavior
C	**Device > Self-consumption > Lower battery discharge limit (BatChaSttMin)**	In this range, the battery is no longer discharged, even in battery-backup operation.
D	**Battery > Areas of application > Minimum width of deep discharge protection area (BatUsDm.DschProDmMin)**	The value specifies which percentage of the Real SOC is to be reserved as deep discharge protection. This value corresponds to a User SOC of 0%. When the state of charge is displayed as 0% (User SOC), the battery is actually (Real SOC) still charged to as much percentage as this value indicates.

4.7 Modular extension of the battery modules

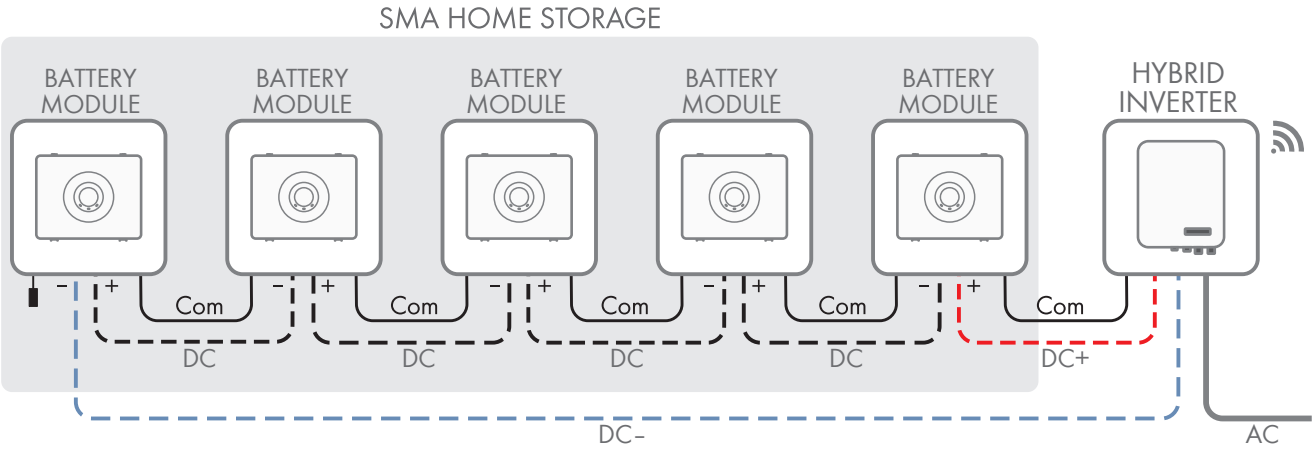

Figure 7: Modular design of the battery modules

After commissioning, battery modules can be extended both in terms of the energy content and the charging and discharging capacity. An extension of the battery modules after 2 years is no longer possible since mixing used and new batteries can result in reduced power and even malfunctions.

5 Transport

⚠ QUALIFIED PERSON

This section contains safety information that must be observed at all times when transporting the battery.

⚠ CAUTION

Risk of injury due to inappropriate transport in a vehicle

Inappropriate transport or insufficient use of transport in a vehicle securing devices can cause the battery to slip or tip over. The battery can cause injuries if it slips or tips over.

- Transport and lift the battery carefully. Take the weight of the battery into account.
- Position the battery in the vehicle in such a way as to prevent it from slipping.
- Secure the battery against slipping and tipping over with restraining straps, for example.
- Wear suitable personal protective equipment for all work on the battery.

The SMA Home Storage battery (HS-BM-3.28-10) is classified as dangerous goods: UN 3480 lithium-ion battery, class 9 (dangerous goods designation UN 3480, dangerous goods class 9). The safety information of the battery must be observed (see Technical information "SMA HOME STORAGE - Safety Information" at www.SMA-Solar.com).

All requirements of the Dangerous Goods Ordinance on Road, Rail, and Inland Navigation and the Convention on the International Carriage of Dangerous Goods by Road must always be complied with:

- ☐ Only trained and instructed personnel are allowed to transport the battery modules on public roads. The instructions must be documented and repeated.
- ☐ Smoking is not permitted in the vehicle during the journey.
- ☐ Smoking is not permitted in the vehicle itself or in the immediate vicinity during loading and unloading.
- ☐ Two tested fire class D metal fire extinguishers (minimum capacity 2 kg) and one set of hazardous goods equipment in accordance with the Convention on the International Carriage of Dangerous Goods by Road must be carried in the vehicle.
- ☐ The outer packaging of the battery must not be opened during transport.

6 Mounting

6.1 Requirements for Mounting

6.1.1 Requirements for the installation site of the battery modules

⚠ WARNING

Danger to life due to fire or explosion

Despite careful construction, electrical devices can cause fires. This can result in death or serious injury.

- Do not mount the product in areas containing highly flammable materials or gases.
- Do not mount the product in potentially explosive atmospheres.

☐ The mounting location must be suitable for the weight and dimensions of the product.

☐ The surface at the installation site must be sufficiently dry, horizontal and flat.

☐ The mounting location must not be exposed to direct solar irradiation. If the product is exposed to direct solar irradiation, the exterior plastic parts might age prematurely and overheating might occur. When becoming too hot, the product reduces its power output to avoid overheating.

☐ There must be no heat sources in the immediate vicinity of the installation site.

☐ All ambient conditions must be met.

☐ The installation site must be less than 2000 m above mean sea level. If you would like to use the battery at altitudes above 2000 m, contact Service.

☐ On flood plains, the installation site must be elevated and always protected from contact with water.

6.1.2 Permitted and prohibited mounting positions of the battery modules

☐ The product may only be mounted in a permitted position. This will ensure that no moisture can penetrate the product.

☐ The product should be mounted such that the LED signals can be read off without difficulty.

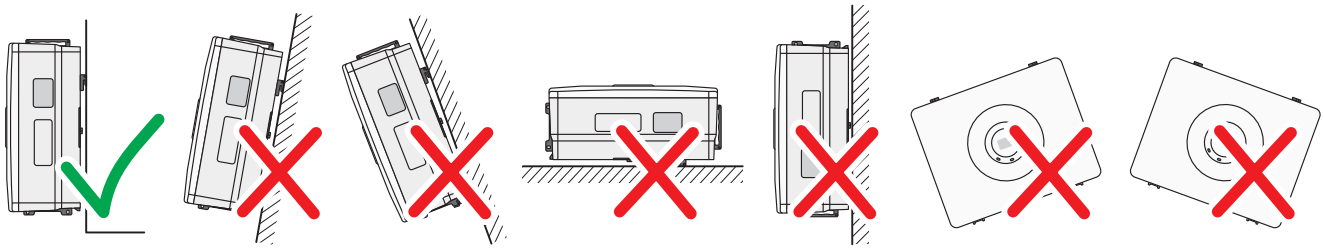

Figure 8: Permitted and prohibited mounting positions

6.1.3 Recommended clearances

If you maintain the recommended clearances, adequate heat dissipation will be ensured. Thus, you will prevent power reduction due to excessive temperature.

☐ Maintain the recommended clearances to walls as well as to other batteries, inverters or objects.

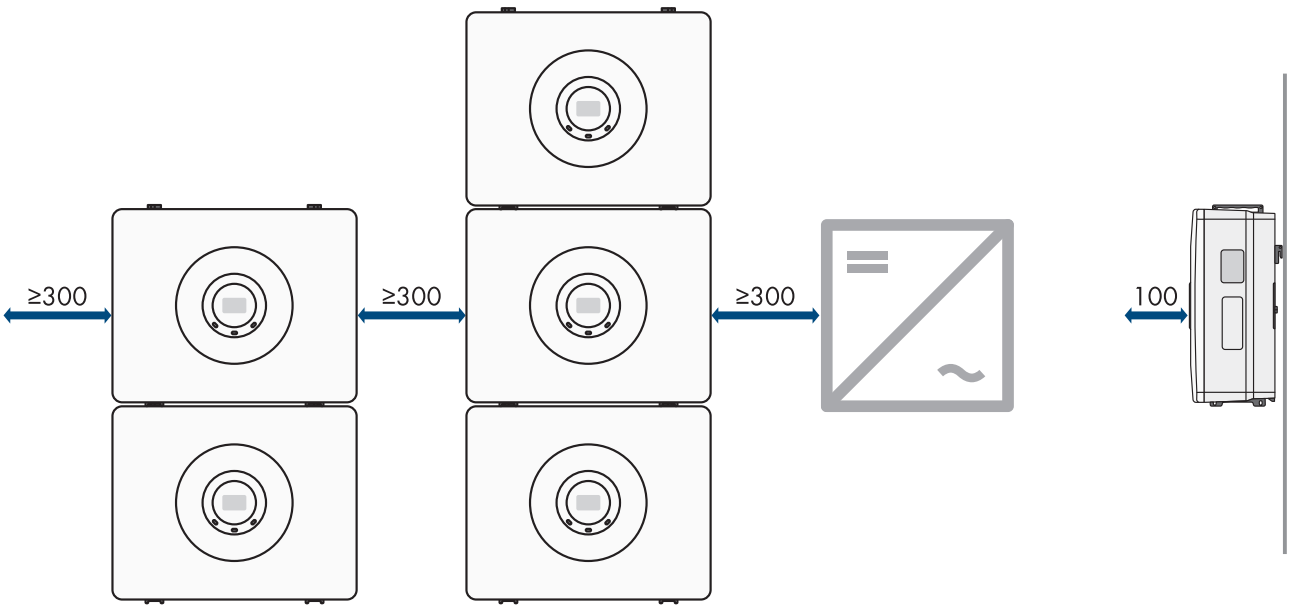

Figure 9: Recommended clearances (dimensions in mm)

6.2 Wall Mounting

6.2.1 Wall mounting variants

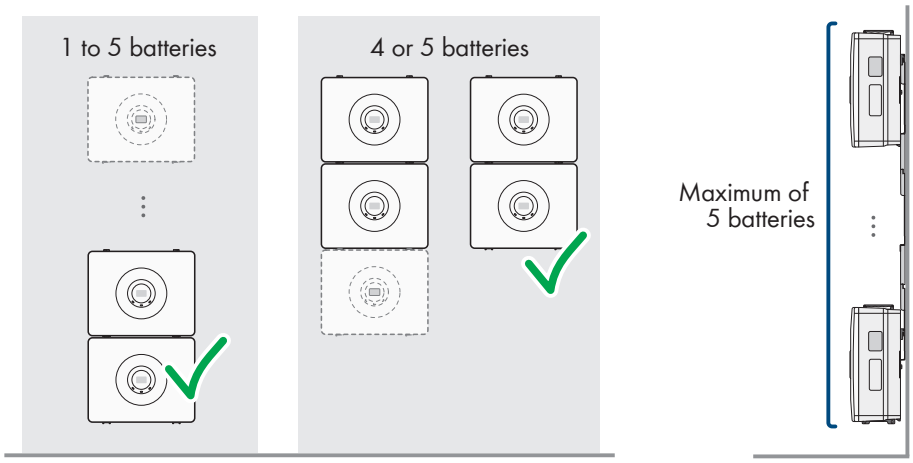

Figure 10: Wall mounting variants (recommended)

Also see:

- Requirements for the electrical connection ⇒ page 37

6.2.2 Dimensions for wall mounting

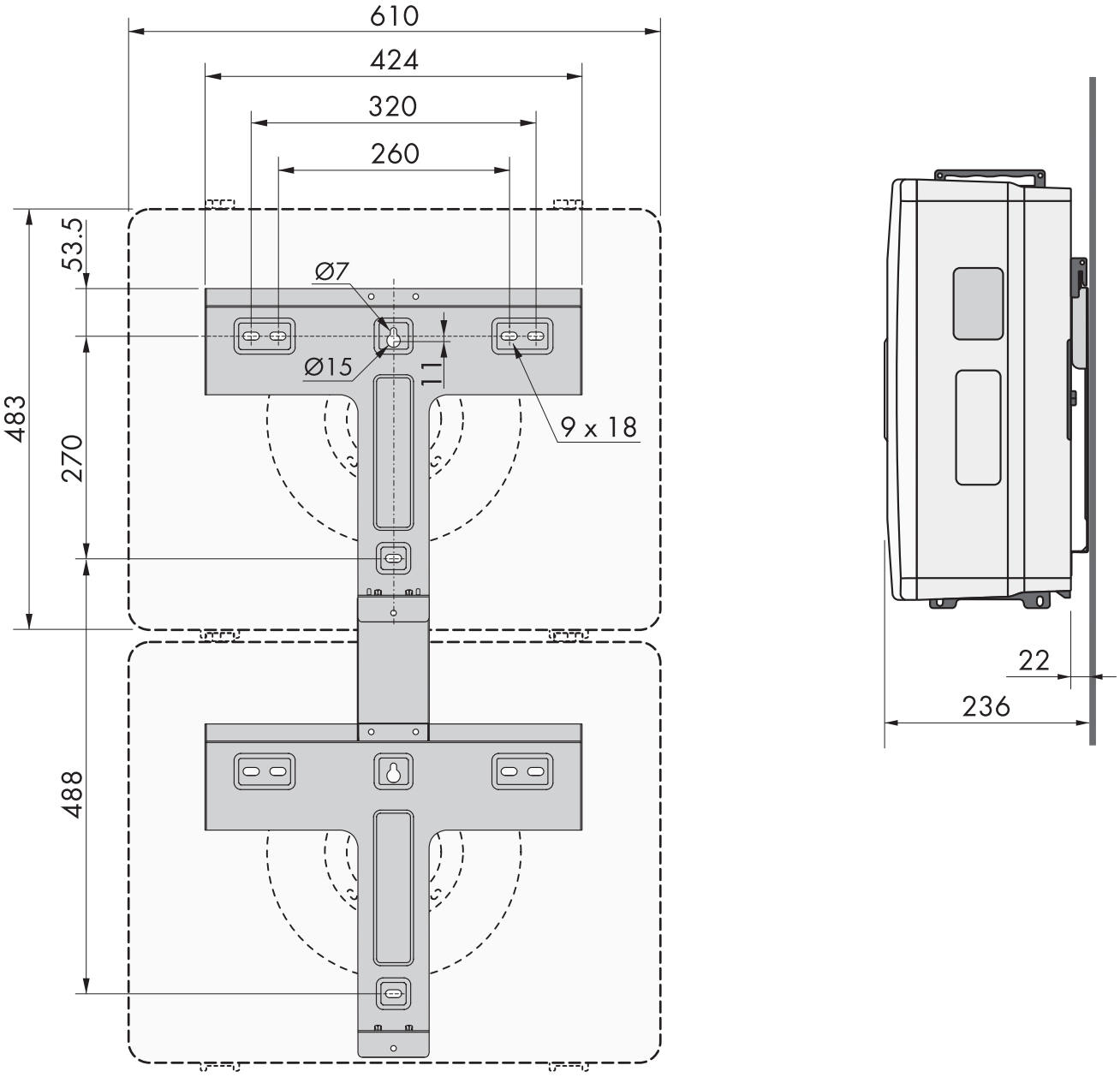

Figure 11: Position of the anchoring points (dimensions in mm)

6.2.3 Mount the battery modules with wall mounting bracket

⚠ QUALIFIED PERSON

Additionally required mounting material (not included in the scope of delivery):

- ☐ 3 screws per battery module suitable for the support surface and weight of the battery module
- ☐ 3 washers per battery module suitable for the screws
- ☐ Where necessary, 3 screw anchors per battery module suitable for the support surface and the screws

Procedure:

1. Mark the position of the drill holes using the wall mounting bracket.
2. Drill the holes and insert the screw anchors.

3. Secure the wall mounting bracket horizontally on the wall using screws and washers.

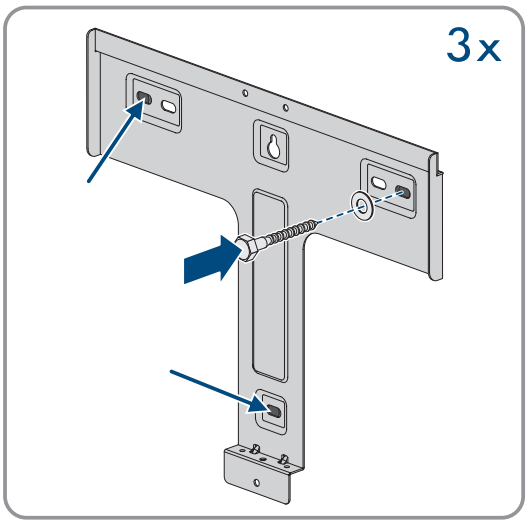

4. For battery modules directly above one another: screw the connecting element with 2 supplied screw and washer assemblies to the wall mounting bracket (TX20; torque 2.5 Nm).

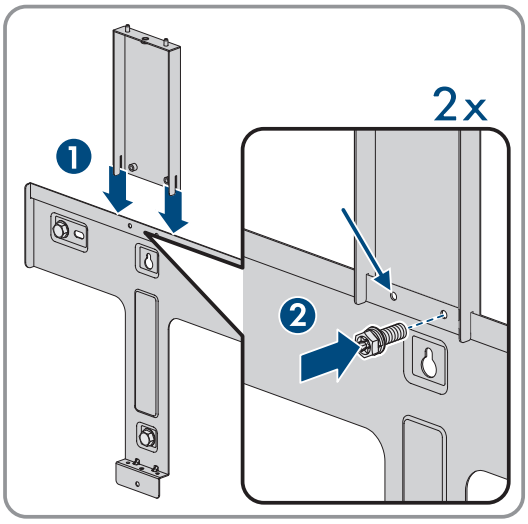

5. For battery modules directly above one another: align another wall mounting bracket on the connecting element and screw down with a supplied screw and washer assembly (TX20; torque 2.5 Nm).

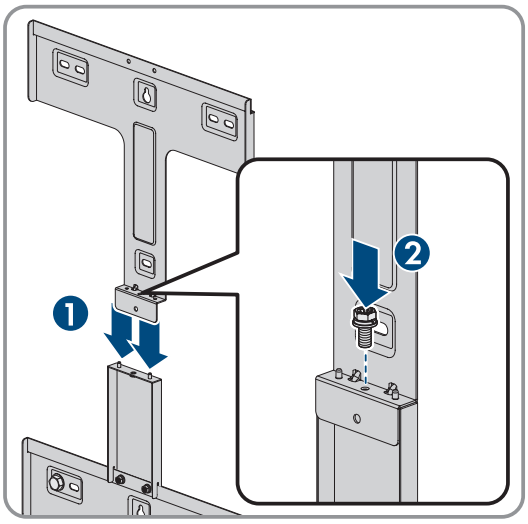

6. For battery modules directly above one another: fasten another wall mounting bracket to the wall using screws and washers.
7. For additional battery modules directly above one another: repeat the above three steps for each battery module.

8. Slightly screw in a supplied screw and washer assembly on the wall mounting bracket at the bottom, leaving space for the mounting bracket of the battery module (TX20).

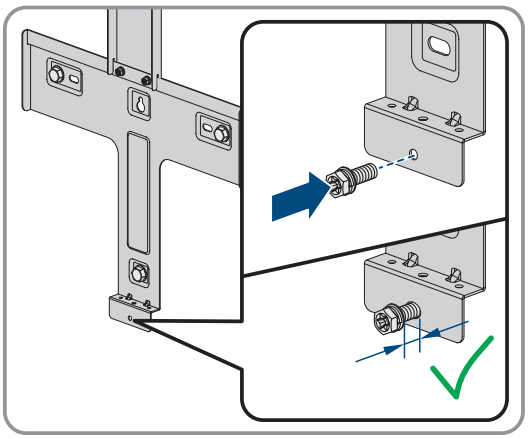

9. Hook the lower battery module in the wall mounting bracket and secure below with the screw and washer assembly provided (TX20; torque 2.5 Nm). To do this, the 2 bolts on the right and left between the ribs on the back of the battery module must be hooked into the keyways of the wall mounting bracket. Ensure that the battery module is securely in place.

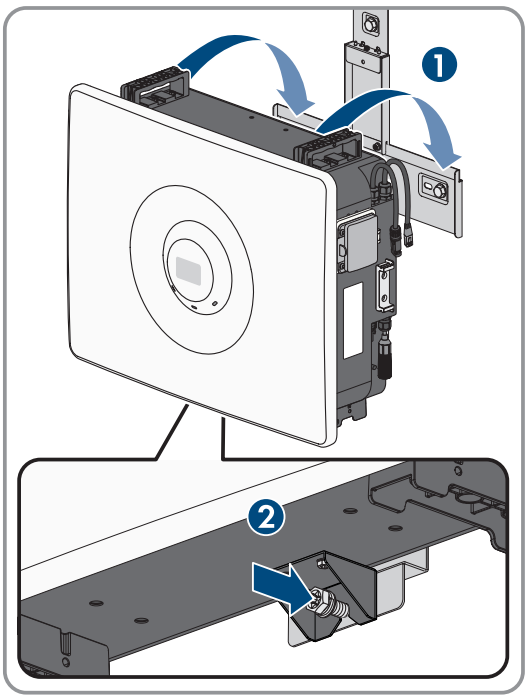

10. For battery modules directly above one another: mount another battery module above the previous battery module.

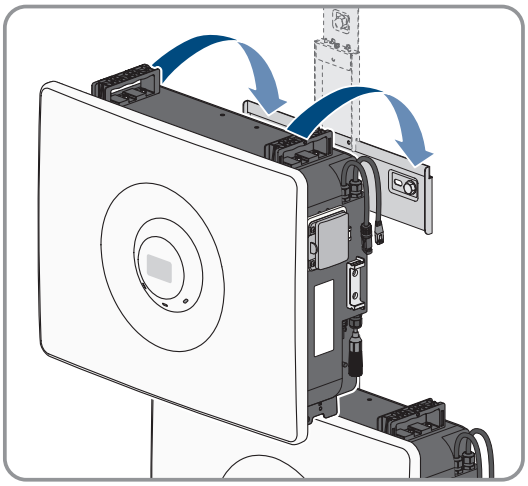

11. For battery modules directly above one another: fasten battery module on the left and right to the previous battery module using a supplied screw and washer assembly (TX20; torque 2.5 Nm). Ensure that the battery module is securely in place.

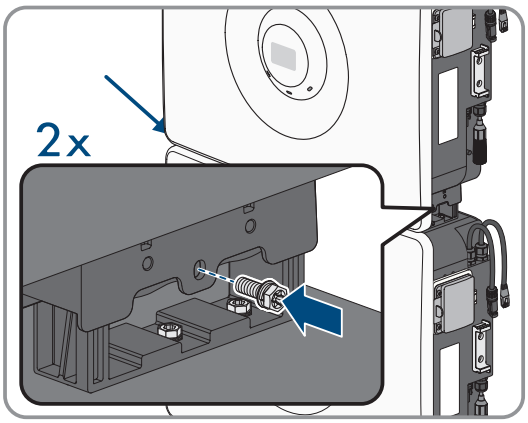

12. For battery modules stacked directly on top of each other: Repeat the above two steps for each additional battery module.

6.3 Mounting with base

6.3.1 Mounting variants when mounting with base

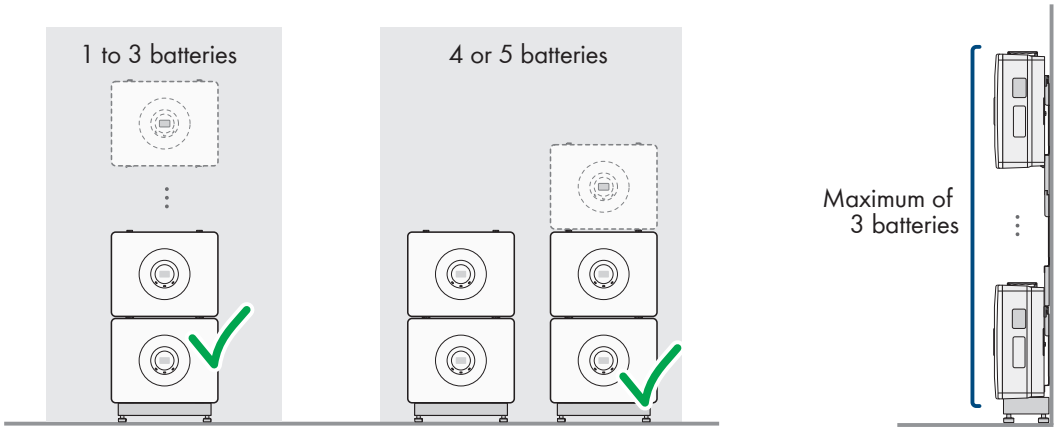

Figure 12: Mounting variants when mounting with base

Also see:

- Requirements for the electrical connection ⇒ page 37

6.3.2 Dimensions for mounting with base

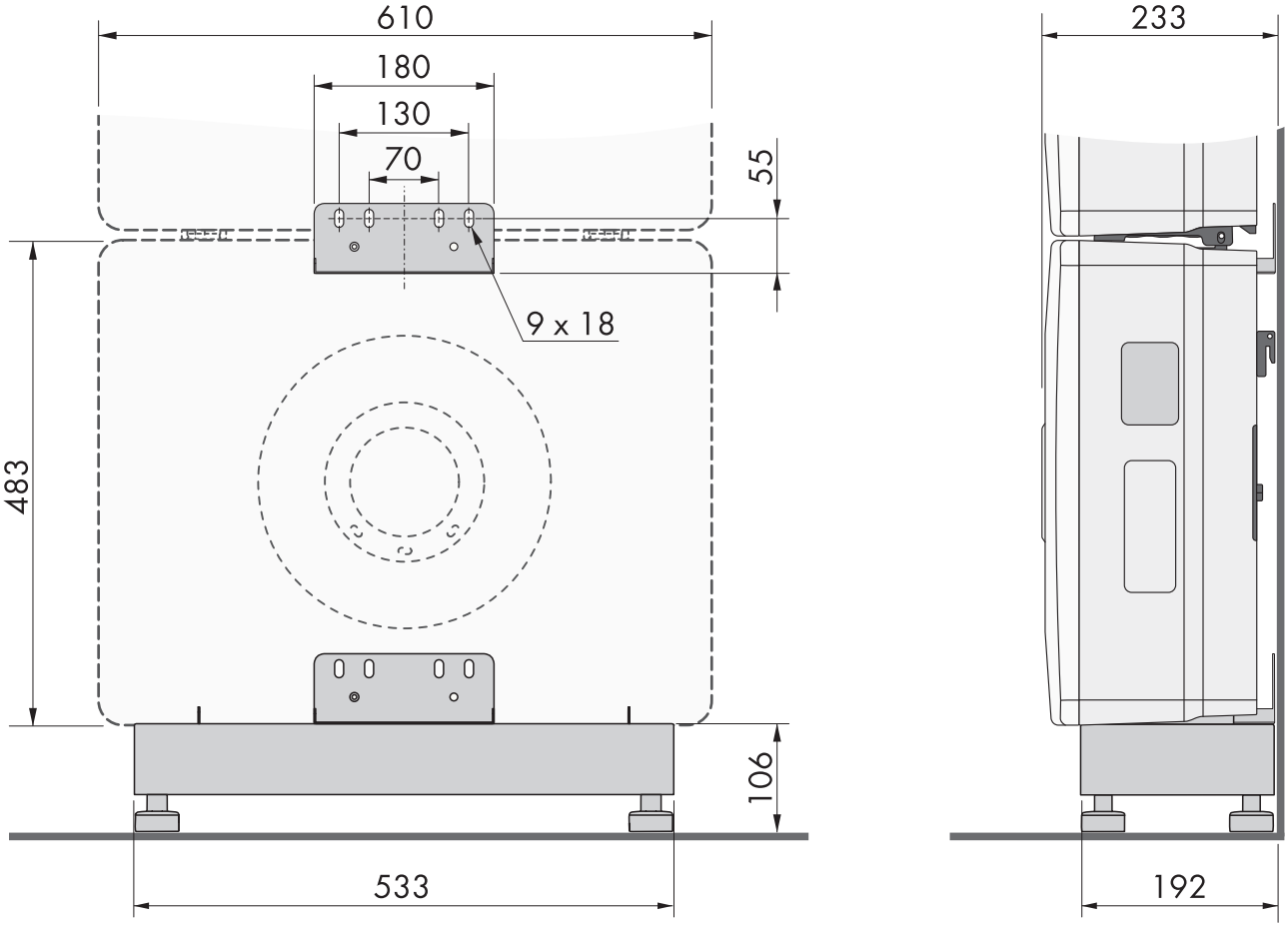

Figure 13: Position of the anchoring points (dimensions in mm)

6.3.3 Mounting the battery modules with base

⚠ QUALIFIED PERSON

Additionally required mounting material (not included in the scope of delivery):

- ☐ 2 to 4 screws per base suitable for the support surface and the weight of the product
- ☐ 2 to 4 washers per base suitable for use with the screws
- ☐ Where necessary, 2 to 4 screw anchors per base suitable for the support surface and the screws

Procedure:

1. Place the base against the wall and align the fixing bracket evenly with the wall.

2. Attach fixing bracket with 2 supplied screw and washer assemblies to the base (TX20; torque 2.5 Nm).

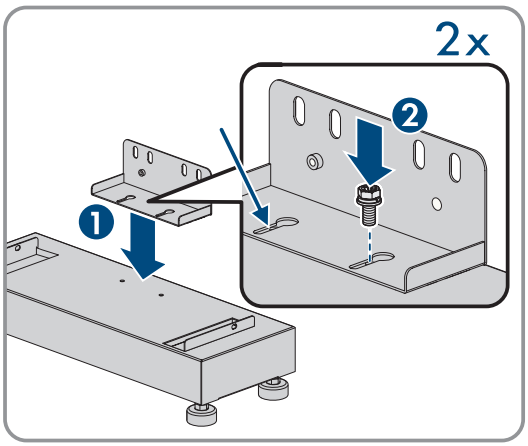

3. Mark the position of the drill holes using the fixing bracket.
4. Drill holes and insert the screw anchors if necessary.
5. Align the base horizontally on the wall and screw to the wall using 2 screws and washers.

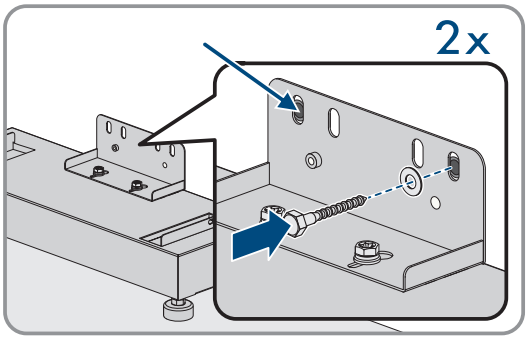

6. Place the battery module on the base. Ensure that the battery module is securely in place.

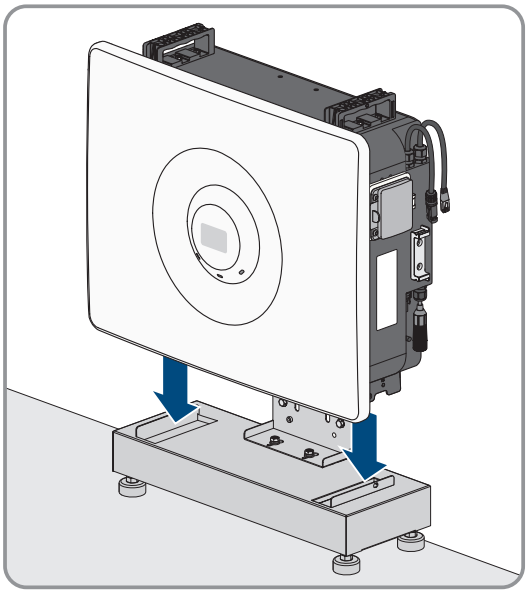

7. Attach battery module on the left and right to the base using supplied screw and washer assembly each (TX20; torque 2.5 Nm).

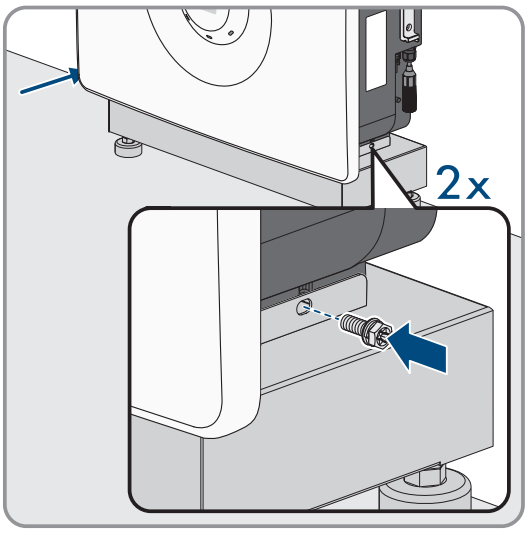

Further procedure for 2 to 3 battery modules directly above one another:

1. Attach the second-to-last battery module (viewed from the top) to the wall using the fixing bracket (TX20; tightening torque 2.5 Nm).
   When there are 2 battery modules, this step is done now.
   When there are 3 battery modules, this step is done after attaching the second battery module.

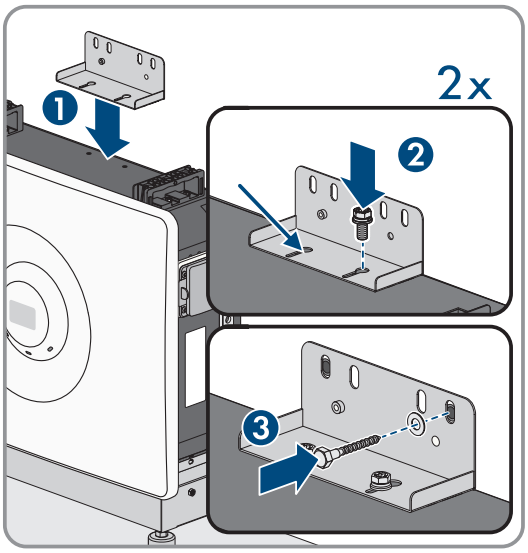

2. Place the second battery module on the first battery module. Fasten the battery module on the left and right to the previous battery module using a supplied screw and washer assembly each (TX20; torque 2.5 Nm). Ensure that the battery module is securely in place.

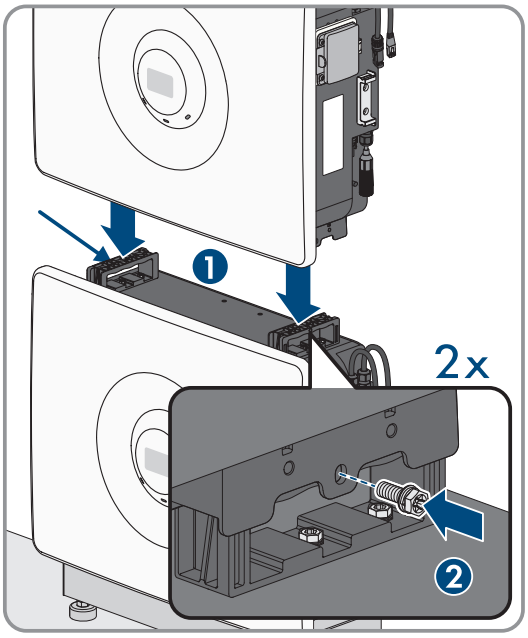

3. For 3 battery modules: now insert the fixing bracket; see above. Repeat the previous step for the third battery module.

6.4 Back-to-back

6.4.1 Mounting variants of the back-to-back

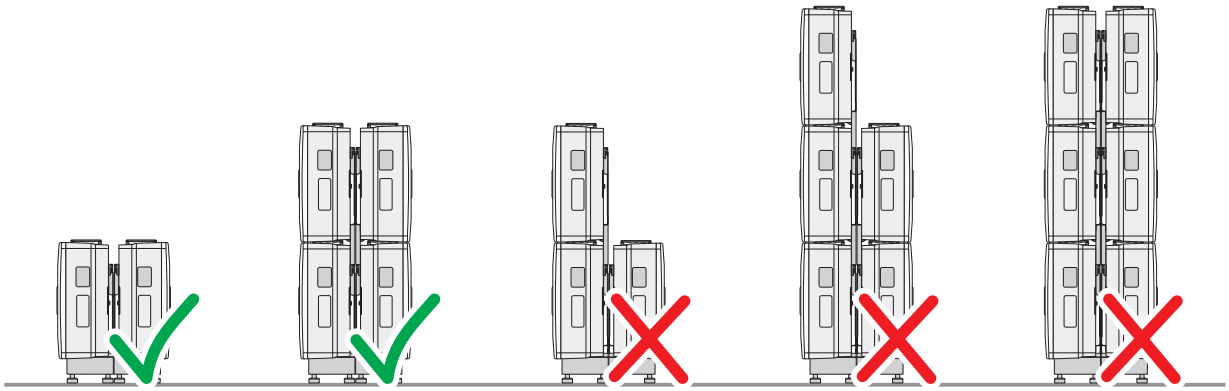

Figure 14: Mounting variants of the back-to-back

Also see:

- Requirements for the electrical connection ⇒ page 37

6.4.2 Mounting dimensions for the back-to-back

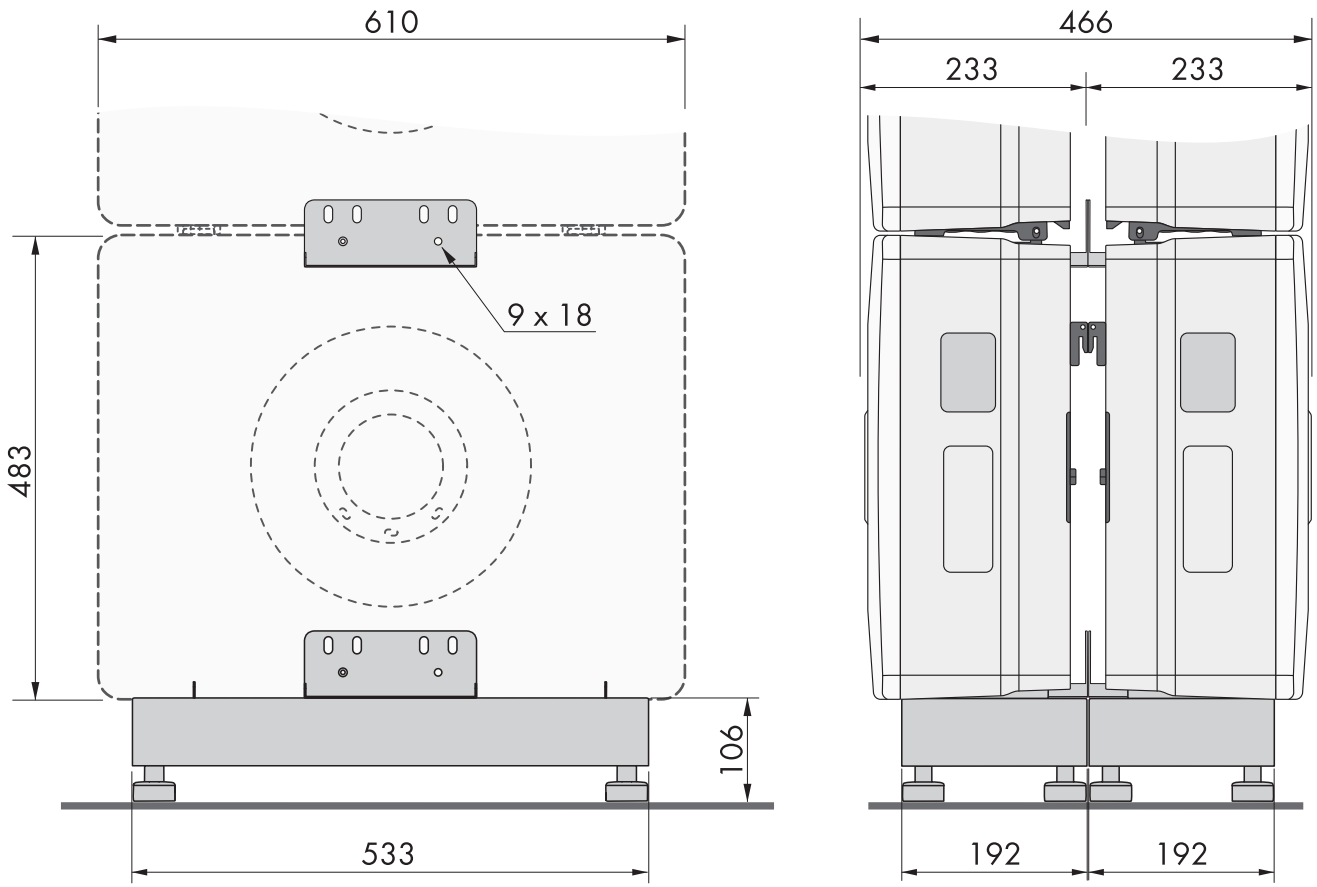

Figure 15: Position of the anchoring points (dimensions in mm)

6.4.3 Mounting back-to-back

⚠ QUALIFIED PERSON

Procedure:

1. Attach 2 fixing brackets to 2 bases using 2 supplied screw and washer assemblies each (TX20; torque 2.5 Nm).

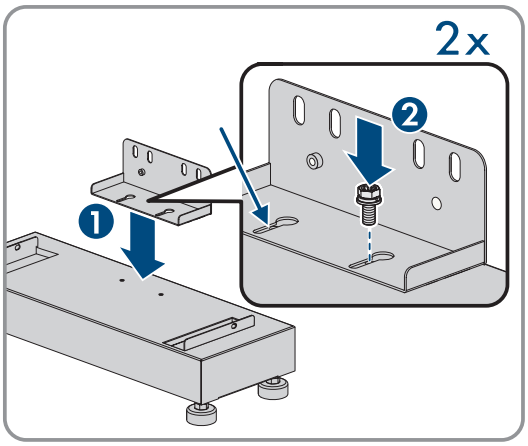

2. Attach the fixing brackets using 2 supplied screw and washer assemblies to each other (TX20; torque 2.5 Nm).

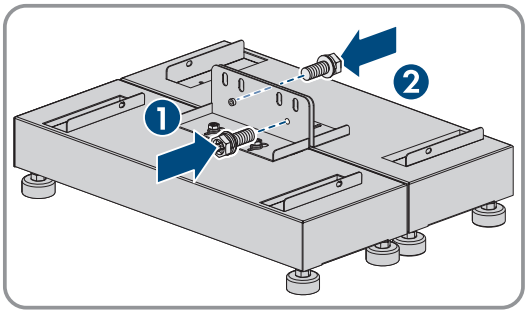

3. Place 2 battery modules each on a base.

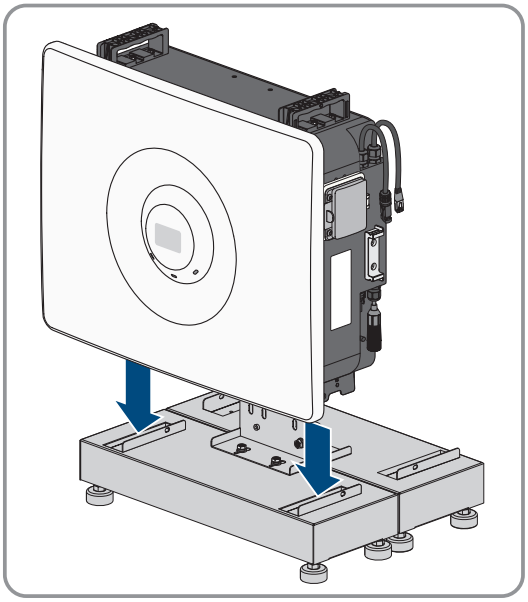

4. Attach both battery modules on the left and right to the base using a supplied screw and washer assembly each (TX20; torque 2.5 Nm). Ensure that the battery modules are securely in place.

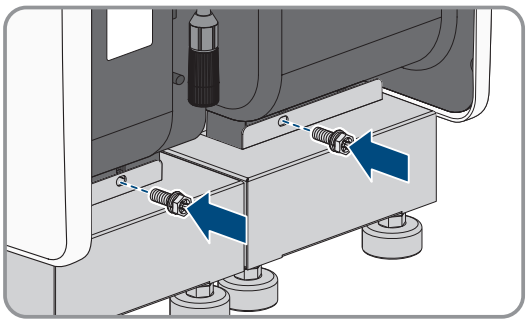

5. For battery modules directly above one another: attach fixing bracket to both battery modules using 2 supplied screw and washer assemblies each (TX20; torque 2.5 Nm). Fasten the fixing brackets to each other using 2 supplied screw and washer assemblies (TX20; torque 2.5 Nm).

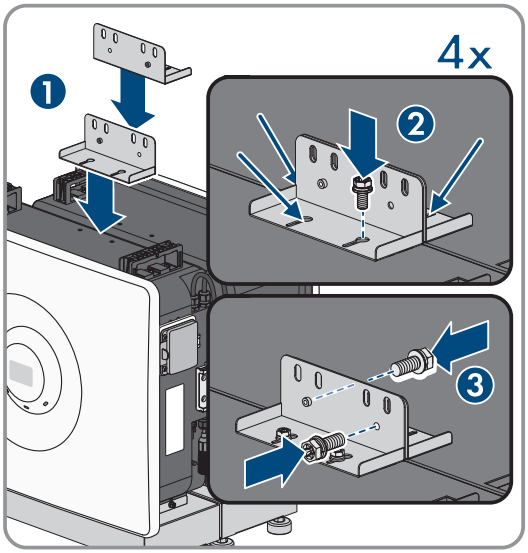

6. For battery modules directly above one another: place 2 more battery modules on the previous battery modules. Attach both battery modules on the left and right to the previous battery modules using a supplied screw and washer assembly each (TX20; torque 2.5 Nm). Ensure that the battery modules are securely in place.

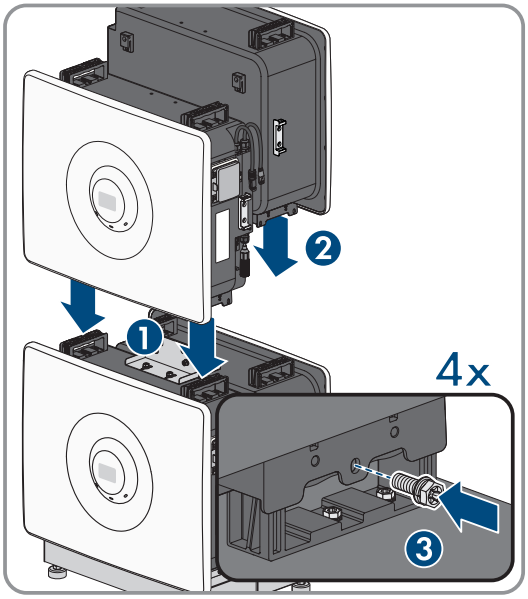

7 Electrical Connection

7.1 Overview of the Connection Area

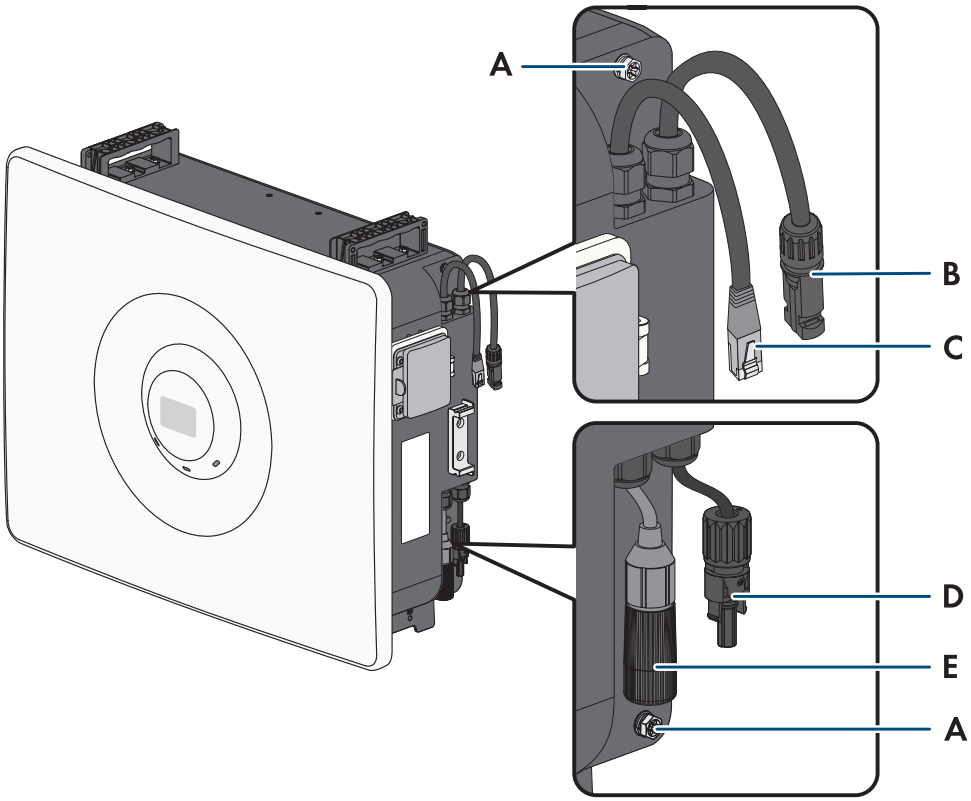

Figure 16: Connection areas on the product

Position	Designation
A	Grounding terminal or equipotential bonding terminal
B	Positive DC connector (type: Multi-Contact MC4) for connecting the battery modules or to the inverter.
C	Communication terminal with RJ45 connector for connection to the next battery module or to the inverter.
D	Negative DC connector (type: Multi-Contact MC4) for connecting the battery modules or to the inverter.
E	Communication terminal with RJ45 socket for connecting the battery communication An RJ45 termination connector is premounted.

7.2 Circuitry overview with Sunny Boy Smart Energy

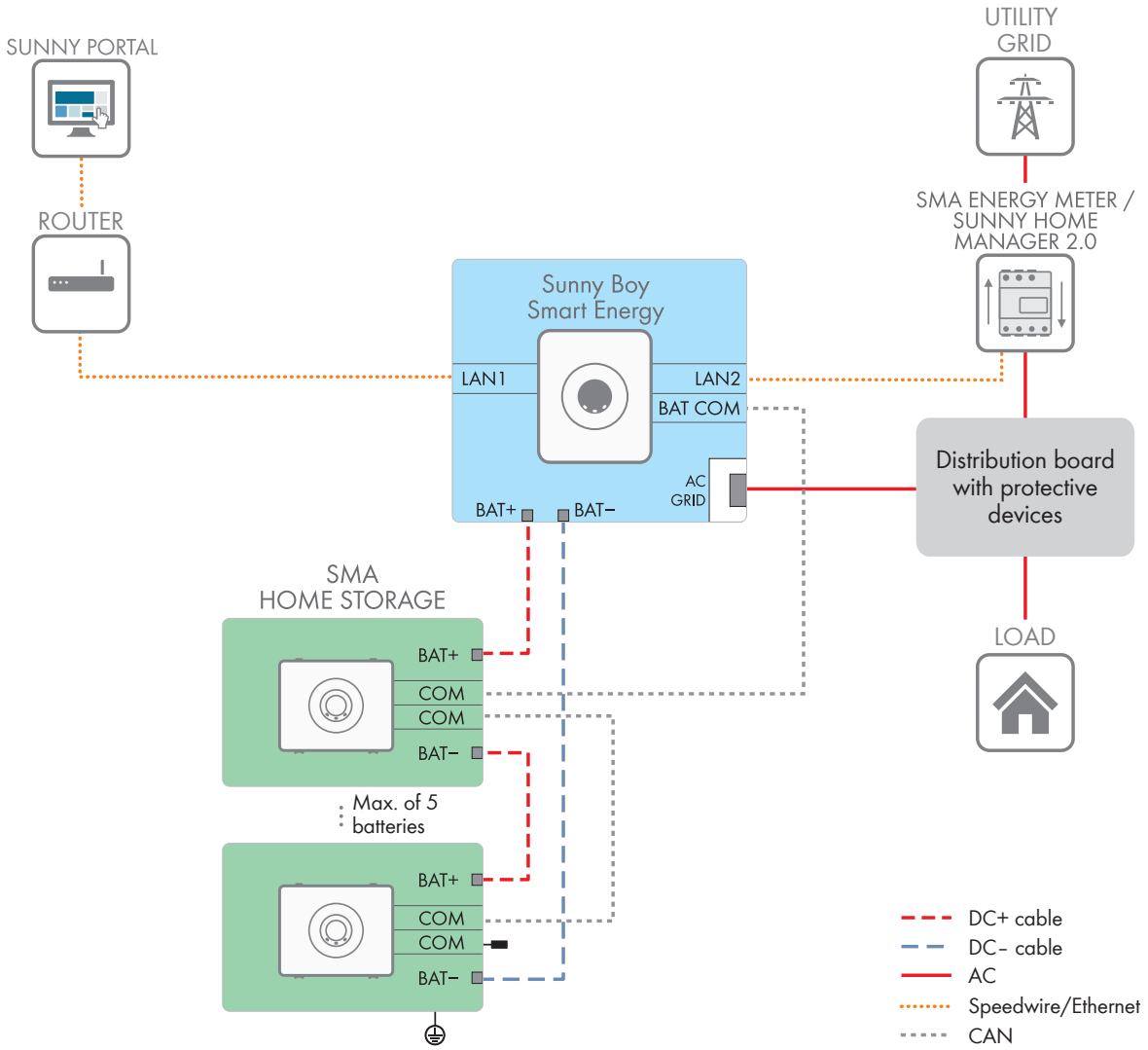

Figure 17: SMA Home Storage with 1 Sunny Boy Smart Energy (example)

7.3 Circuitry overview with Sunny Tripower Smart Energy

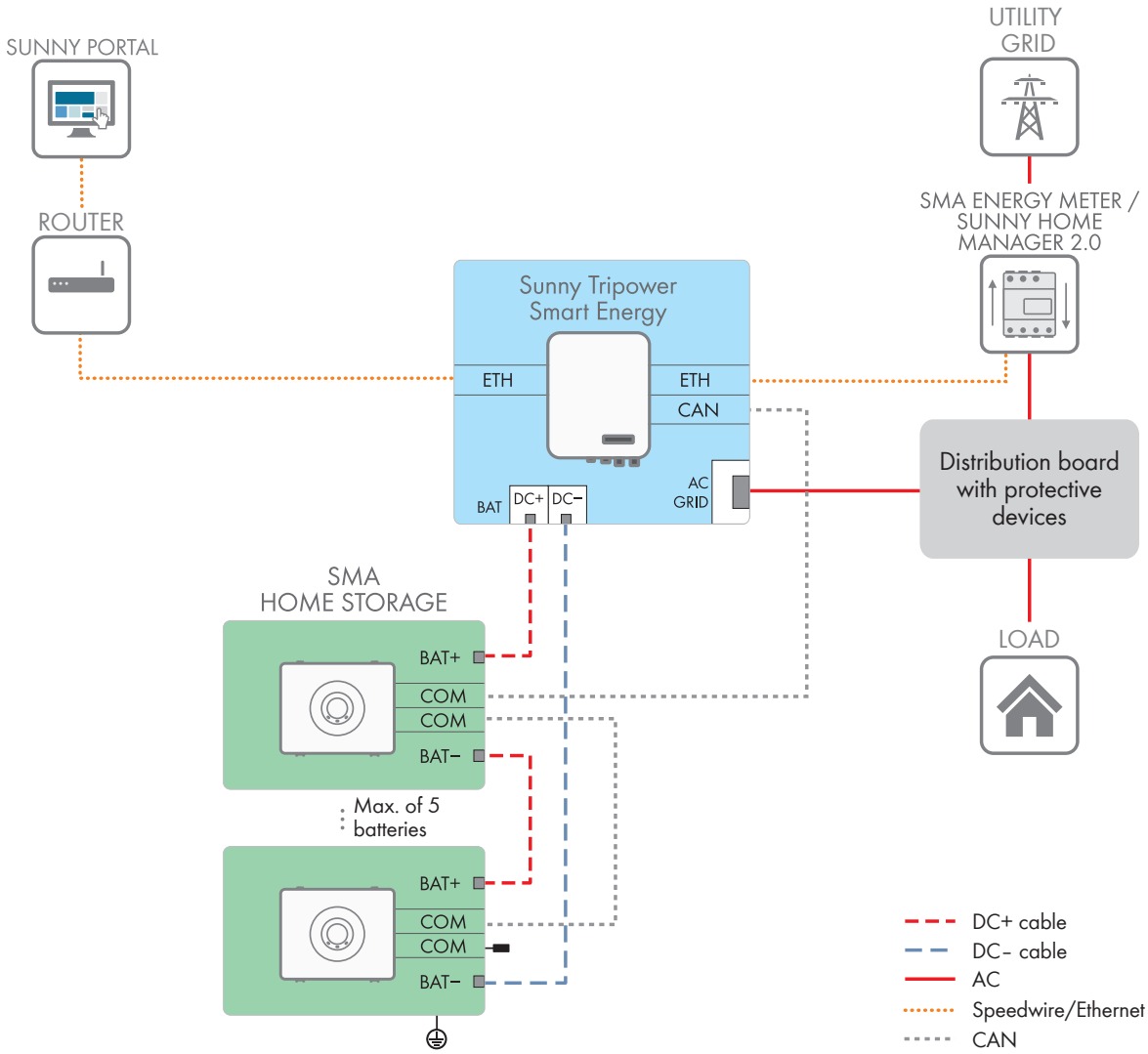

Figure 18: SMA Home Storage with 1 Sunny Tripower Smart Energy (example)

7.4 Requirements for the electrical connection

7.4.1 Grounding cable requirements

An additional grounding of the battery modules is required to protect from touch current in case the grounding conductor fails at the terminal of the DC cable.

- ☐ The supplied grounding cables for the connection between the battery modules must be used.
- ☐ If the length of the supplied grounding cables is not sufficient, longer grounding cables must be used with a cross-section of 6 mm² and the supplied terminal lugs.
- ☐ To connect the additional grounding via an external grounding point, a ring terminal lug must be used.

7.4.2 DC cable requirements

- ☐ If a battery connecting cable is part of the inverter scope of delivery, this battery connecting cable and a provided MC4 connector are to be used.
- ☐ If a battery connecting cable is not part of the inverter scope of delivery or if a longer cable is needed, the provided MC4 connectors and a battery connecting cable with a cross-section of 6 mm² must be used.
- ☐ The cables must be made of copper.

☐ The DC cables must be rated for the maximum battery voltage and the maximum battery current.

7.4.3 Battery data cable requirements

Battery data cable for the connection between the SMA Home Storage and Sunny Tripower Smart Energy

For the connection between the SMA Home Storage and Sunny Tripower Smart Energy, a pre-assembled battery communication cable must be used (SMA order number: HS-COM-CBL-3-10). This battery data cable has an RJ45 and a COM connector.

A commercially available network cable can be used as a battery data cable. The cable length and quality do affect the quality of the signal. Observe the following cable requirements:

☐ Cable category: minimum CAT5e

☐ Plug type: RJ45 of Cat5, Cat5e or higher and without integrated locking lever protection

☐ Shielding: SF/UTP, S/UTP, SF/FTP or S/FTP

☐ Maximum cable length between 2 nodes when using patch cables: 50 m

☐ UV-resistant for outdoor use

7.5 Electrical Connection Procedure

This section describes the procedure for the electrical connection of the product. It provides an overview of the steps, which must be performed in the prescribed sequence.

Procedure		See
1.	Ensure that the requirements for the electrical connection are fulfilled.	Section 7.4, page 37
2.	Connect the grounding cables between the battery modules.	Section 7.6, page 38
3.	Connect the battery to the external grounding point.	Section 7.6, page 38
4.	Connect the data cables of the modules among each other.	Section 7.7, page 39
5.	Connecting the battery communication system to the inverter	Section 7.9, page 42
6.	Connect the DC cables of the modules among each other.	Section 7.10, page 43
7.	Routing the DC cables to the inverter	Section 7.10, page 43

7.6 Grounding the Battery

⚠ QUALIFIED PERSON

Additionally required material (not included in the scope of delivery):

☐ A suitable grounding cable with ring terminal lug for the connection of the additional grounding via an external grounding point.

☐ At least 1 longer grounding cable is required to connect the battery modules to each other (minimum length: 1.5 m) if they are not mounted directly above each other. This is unavoidable for:

- 4 or 5 battery modules
- Back-to-back

Requirement:

☐ Make sure that the battery modules were correctly mounted.

Procedure:

1. Disconnect all products from voltage sources.
2. Connect battery modules mounted directly above each other via the supplied grounding cable. To do this, tighten the provided screw and washer assemblies at the connection points closest to each other (TX20; torque: 2.5 Nm). For batteries not directly mounted above one another, use a longer grounding cable.

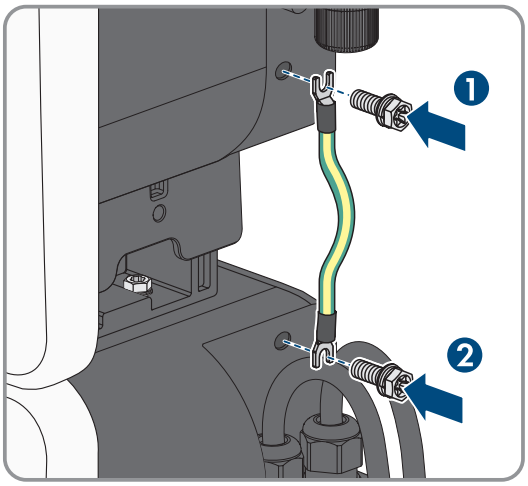

3. Strip off the insulation of a grounding cable suitable for the external grounding and crimp a supplied terminal lug to the cable.
4. Tighten the provided screw and washer assembly at the lower connection point for the additional grounding (TX20; torque: 2.5 Nm).

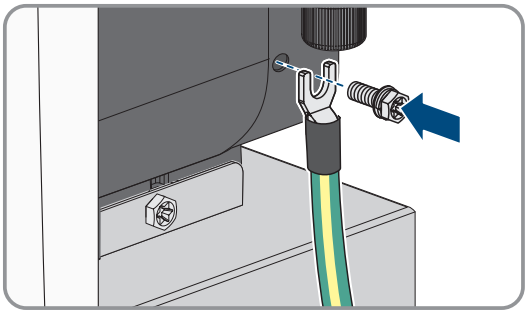

5. Connect the grounding cable to the external grounding point. The external grounding points of battery and inverter must have the same potential.

Also see:

- Grounding cable requirements ⇒ page 37
- Overview of the Connection Area ⇒ page 35
- Circuitry overview with Sunny Tripower Smart Energy ⇒ page 37

7.7 Connecting the battery data cable between the battery modules

⚠ QUALIFIED PERSON

To connect the data cables of the battery, always use the **COM** socket and always connect the 2 closest battery modules to each other. The unused communication terminal with RJ45 socket of the last battery module must retain the premounted RJ45 termination plug.

Additionally required material (not included in the scope of delivery):

☐ To connect the battery modules, 1 longer battery data cable with an RJ45 connector is required if the battery modules are not mounted directly above each other. This is unavoidable for:

- 4 or 5 battery modules
- Back-to-back

Prerequisite:

☐ Make sure that the battery modules were correctly mounted.

Procedure:

1. Disconnect all products from voltage sources.
2. Detach adapter and RJ45 termination plug of one of the bottom battery data cables. The premounted RJ45 termination plug on the last battery module must not be removed.

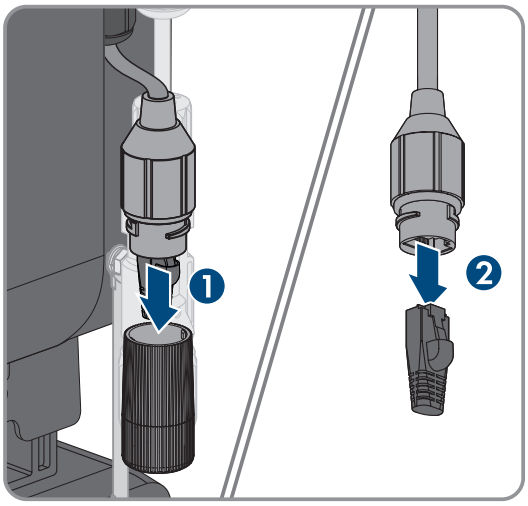

3. Unscrew the cable support sleeve and swivel nut from the adapter. The cable support sleeve can be pressed out from the other side.

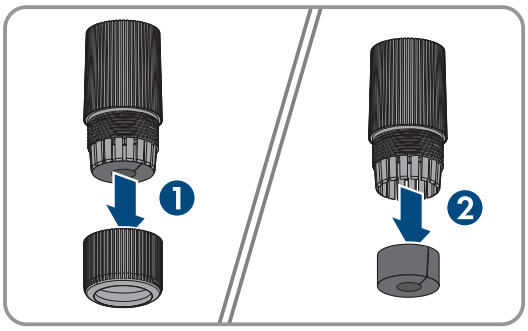

4. Attach the swivel nut and cable support sleeve to the nearest battery data cable. To do this, first route the connector through the swivel nut.

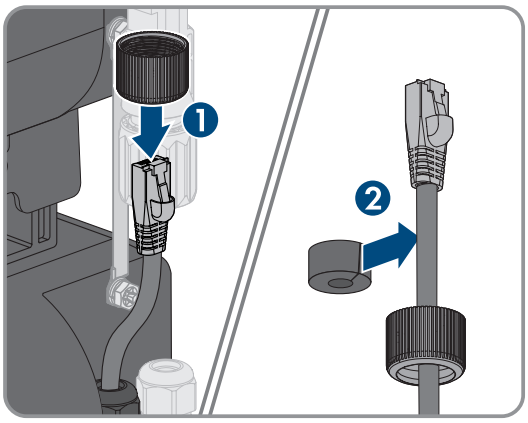

5. Insert the connector through the adapter and plug the battery data cables together.

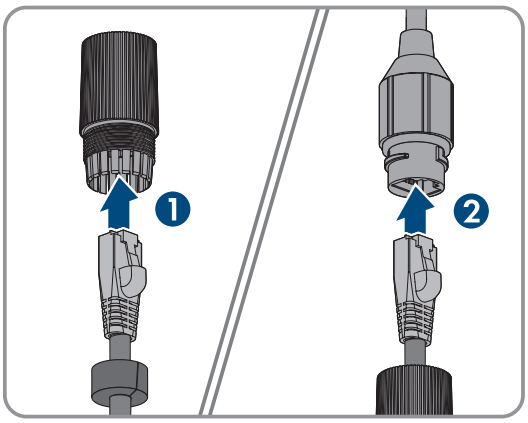

6. Secure the connection. To do this, firmly tighten the adapter and the swivel nut.

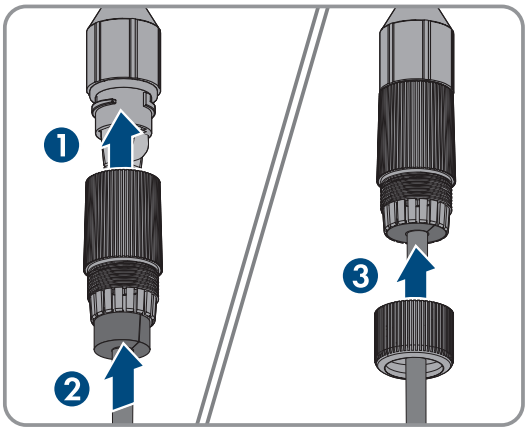

7. Ensure that the battery data cable is securely in place by pulling slightly on it.

Also see:

- Overview of the Connection Area ⇒ page 35
- Battery data cable requirements ⇒ page 38
- Circuitry overview with Sunny Tripower Smart Energy ⇒ page 37

7.8 Connection overview of the battery communication with the inverter

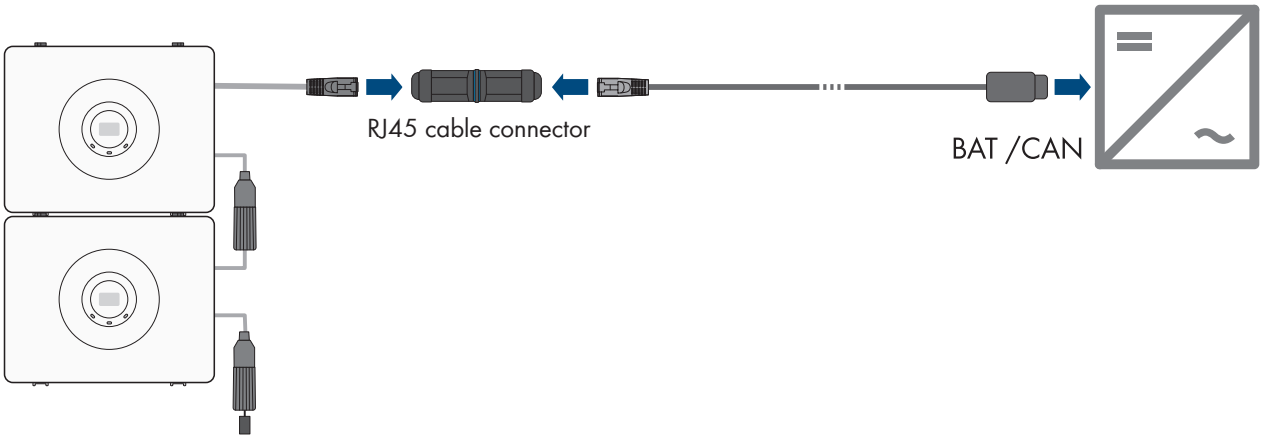

Figure 19: Connection overview of the battery communication with the inverter

7.9 Connecting the battery communication system to the inverter

⚠ QUALIFIED PERSON

Additionally required material (not included in the scope of delivery):

- ☐ Battery data cable with RJ45 connector
- ☐ Pre-assembled battery data cable for the connection to the Sunny Tripower Smart Energy (SMA order number: HS-COM-CBL-3-10)

Prerequisite:

- ☐ Ensure that the battery modules have been correctly mounted and connected.

Procedure:

1. Disconnect all products from voltage sources.
2. Plug in one of the connectors of the communication cable on the inverter.
3. Remove the adapters from the RJ45 cable connector.

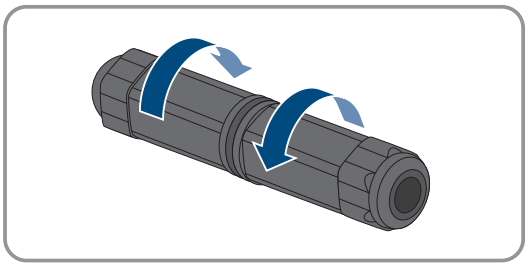

4. Detach the swivel nuts.

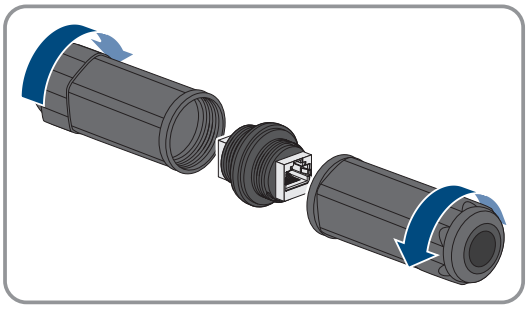

5. Detach the cable support sleeve. The cable support sleeve can be pressed out from the other side.

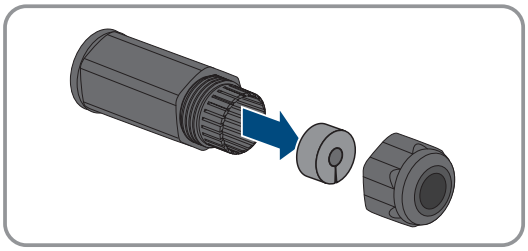

6. Plug the communication cable into the RJ45 cable connector. Route the cable through the swivel nut and through the adapter.

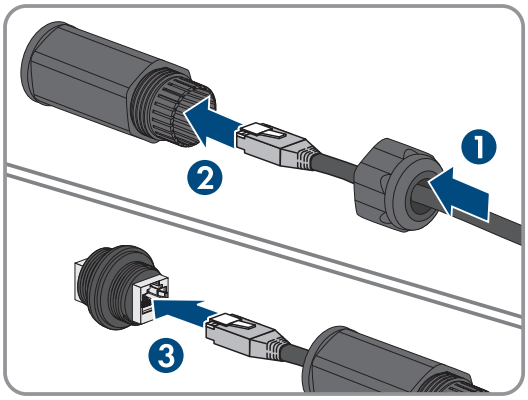

7. Attach the cable support sleeve between the swivel nut and adapter and secure the cable. To do this, firmly tighten the adapter and the swivel nut.

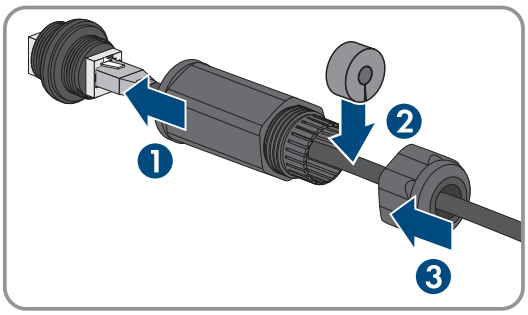

8. Repeat the procedure for connection on the battery side of the communication cable. Make the connection on the top communication cable of the top battery.

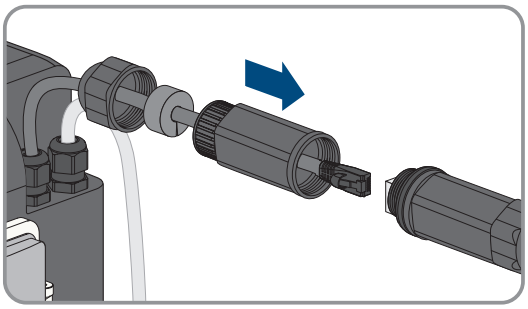

9. Make sure that the RJ45 termination plug is plugged in on the bottom battery data cable of the last battery module.

Also see:

- Overview of the Connection Area ⇒ page 35
- Battery data cable requirements ⇒ page 38
- Circuitry overview with Sunny Tripower Smart Energy ⇒ page 37
- Connection overview of the battery communication with the inverter ⇒ page 41

7.10 Connecting the DC Cables

⚠ QUALIFIED PERSON

To connect the DC cables, always connect the 2 nearest battery modules to each other. All battery modules are connected in series.

Additionally required material (not included in the scope of delivery):

☐ 2 DC cables for connecting to the inverter

☐ At least 1 longer DC cable is required to connect the battery modules to each other if they are not mounted directly above each other. This is unavoidable for:

- 4 or 5 battery modules
- Back-to-back

Requirement:

☐ The battery modules must be mounted.

☐ All grounding cables must be connected.

Procedure:

1. Ensure that the battery modules and the inverter are disconnected from all voltage sources.
2. To make a longer cable, use the provided MC4 connectors.

3. Connect the battery modules to each other in series. For this, connect the plug connector of the DC cable **BAT+** with the **BAT-** connector.

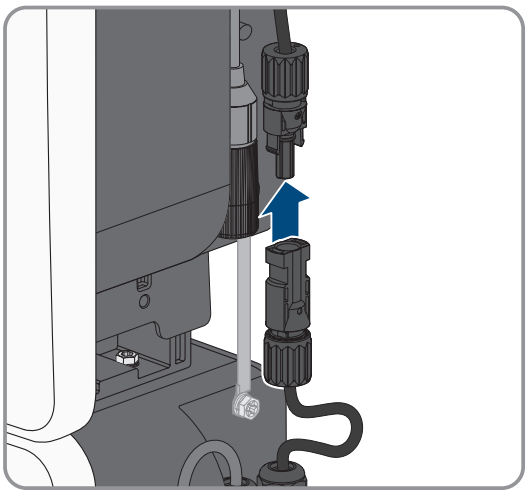

4. Prepare the DC cables of the inverter. If needed, crimp the provided MC4 connectors with the cables.
5. Connect the top plug connector **BAT+** of the top or last battery module with the positive terminal of the inverter (see inverter documentation). Pay attention to the polarity details on the battery module and inverter.

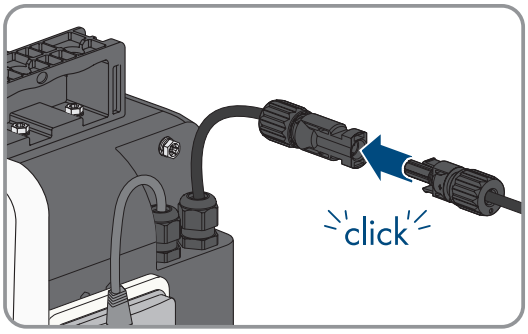

6. Connect the bottom plug connector **BAT-** of the bottom or first battery module with the negative terminal of the inverter (see inverter documentation). Pay attention to the polarity details on the battery module and inverter.

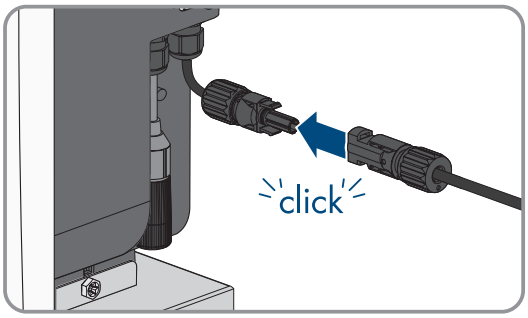

Also see:

- Overview of the Connection Area ⇒ page 35
- DC cable requirements ⇒ page 37
- Circuitry overview with Sunny Tripower Smart Energy ⇒ page 37

8 Commissioning

8.1 Commissioning Procedure

This section describes the procedure for commissioning the SMA Home Storage.

It provides an overview of the steps, which must be performed in the prescribed sequence.

Procedure		See
1.	Check that all installed components have been correctly mounted and connected.	Section 8.2, page 45
2.	If there is an SMA Home Manager installed, commission the SMA Home Manager.	Manual of the SMA Home Manager
3.	Put the inverter into operation and check for the latest firmware.	Manual of the inverter
4.	Start the commissioning of the battery modules.	Section 8.3, page 45
5.	Establish a connection to the user interface of the inverter.	Manual of the inverter
6.	Log into the user interface and configure the system.	Manual of the inverter
7.	Check the configuration of the battery modules.	Section 8.4, page 47

8.2 Checking the Mounting and Connection Work

⚠ QUALIFIED PERSON

Before commissioning or during setup, perform a thorough check of all mounting and connection work. The basis for the check is DIN VDE 0100-600.

Prerequisite:

☐ Make sure that all batteries were correctly mounted and connected.

Procedure:

1. Measure the ground resistance and continuity of the grounding conductor.
2. Measure the insulation resistance.
3. Check the polarity between the inverter and battery.

8.3 Commissioning the battery modules

⚠ QUALIFIED PERSON

Requirements:

☐ The battery modules must be correctly mounted.

☐ All cables must be correctly connected.

☐ The inverter must be equipped to be compatible with the battery and the firmware version required at a minimum (see technical information "Approved Batteries and Information on Battery Communication Connection" of the inverter).

Procedure:

1. Open the cover of the DC switch on each battery module. The side cover must not be mounted for this.

2. Turn on the DC switches one after the other.

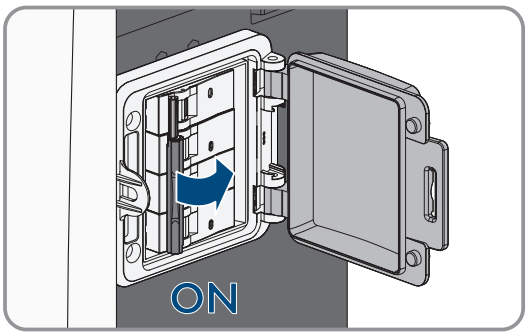

   ☑ The green LED is glowing or flashing.
   ☑ The blue LED is flashing first and starts glowing once a connection has been successfully established.
3. Close the cover of the DC switch on each battery module.
4. Optional: Attach the cover to the top battery module. Then, attach the top cover on the upper battery enclosure with the two cutouts onto the carrying handles.

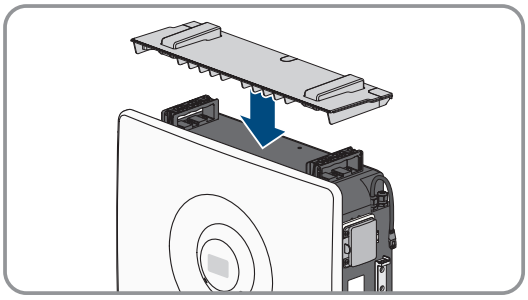

5. Attach the side covers. For each side cover, insert the 4 guide pins on the side cover into the 4 guide openings on the battery enclosure.

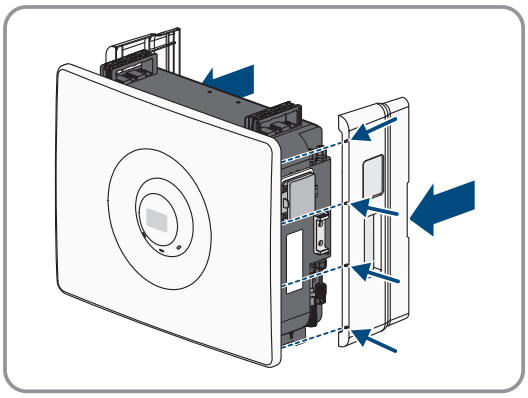

6. Push each side cover against the battery enclosure until it snaps into place.

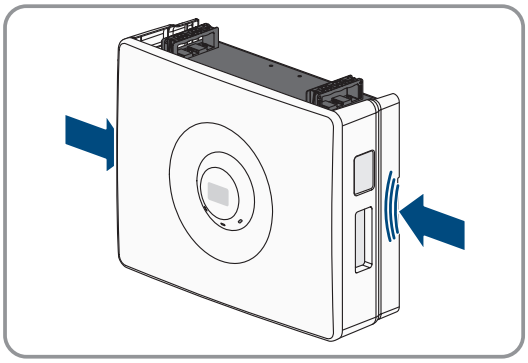

7. Attach the second side cover in the same way as described for the first one.
8. Commission the inverter (see product manual).

Also see:

- LED signals of the battery modules ⇒ page 19
- Checking the configuration of the battery modules on the user interface of the inverter ⇒ page 47

8.4 Checking the configuration of the battery modules on the user interface of the inverter

⚠ QUALIFIED PERSON

The user interface available and its functions depend on the inverter. Refer to the inverter manual for detailed information.

Procedure:

1. Activate the user interface of the inverter.
2. Log in as **Installer**.
3. Depending on the inverter, call up **Installation assistant** or **Configuration wizard**.
4. Follow the instructions of the user interface up to **Battery configuration**.
5. Check whether the **Current capacity** shown in the inverter user interface matches the usable energy capacity indicated in this manual.
6. If the two specifications regarding battery capacity do not match, disconnect the inverter from voltage sources, ensure that all battery cables are property connected and recommission the inverter.
7. If the two specifications regarding battery capacity still do not match, contact Service.

Also see:

- Technical Data ⇒ page 70

9 Disconnecting the battery modules from voltage sources

⚠ QUALIFIED PERSON

1. Disconnect the inverter from voltage sources (see inverter manual).
2. Remove the right side cover from each battery module.
3. Open the cover of the circuit breaker on each battery module.
4. Switch off the circuit breakers one after the other.

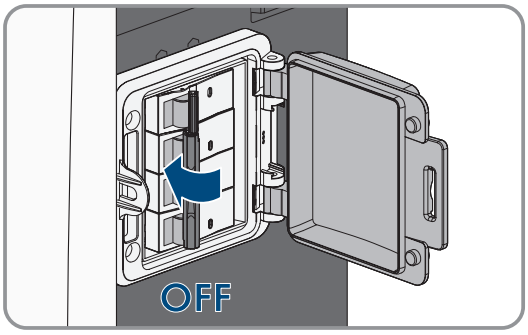

5. Disconnect all DC connector between the battery modules and to the inverter from each other.

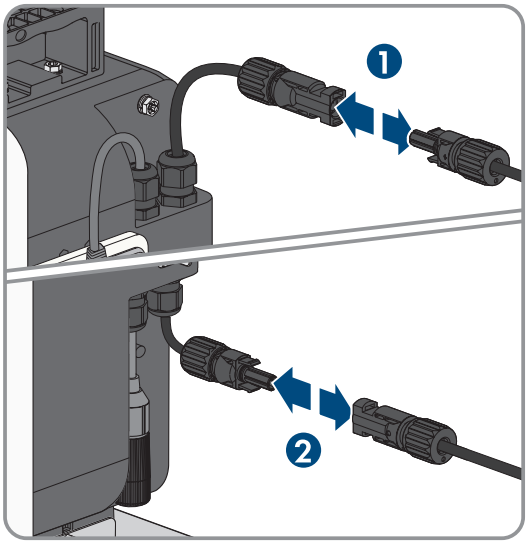

6. Check for absence of voltage between the positive and negative terminal of each battery module.

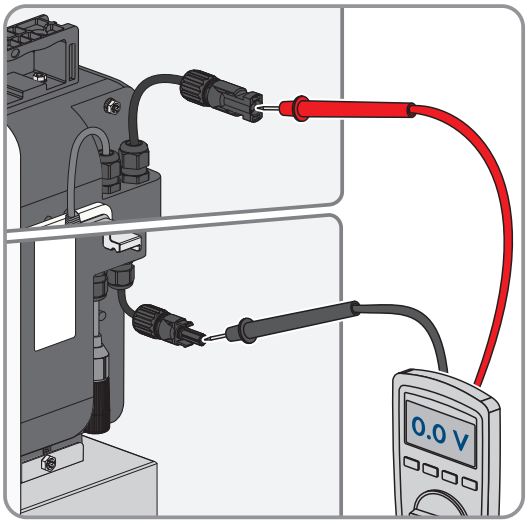

7. Close the cover of the circuit breaker on each battery module.
8. Attach the side covers.

10 Cleaning

System components exposed to soiling must be cleaned regularly to ensure that all products are free of dust, leaves, and other dirt.

NOTICE

Damage to the product due to cleaning agents

The use of cleaning agents may cause damage to the product and its components.

- Clean all battery components with a dry cloth only.

11 Troubleshooting

11.1 Options for troubleshooting

Status changes or errors on one or more battery modules can become noticeable in different ways.

Status changes or errors	Signs on the battery	See
Error with event message and LED display	Some possible errors are indicated by event messages in the inverter user interface. The same error is also signaled each by the red LED on the battery module flashing or glowing.	Section 11.2, page 50
Errors with LED display only	Only the red LED is flashing or glowing on one or several battery modules. There is no event message on the user interface of the inverter.	Section 11.3, page 62
External appearance of the battery module	Changes to the external appearance of the battery modules indicate an error in the battery. Even without event message or LED display, there is need for action.	Section 16.1, page 68

11.2 Event messages on the user interface of the inverter

11.2.1 Event 5150 / 96 / 9315

⚠ QUALIFIED PERSON

Event number:

Firmware version	Event number
< 3.4.20.R	9315
3.4.20.R	96 Example: 0x**01**96, 0x0001, 0x0000, 0x0000 Number of the battery module: 01
≥ 3.5.x.R	5150 or 150

Event message:

- **Battery imbalancing fault**

Explanation:

Balancing error battery system or battery module

LED signal on battery module:

Red LED is flashing quickly.

Corrective measures:

- Disconnect the system (battery and inverter) from voltage sources.
- Check whether the MC4 connectors on all DC connections are correctly positioned.
- Wait until the operating temperature of the battery module is back within the specified range.
- If the error persists, contact Service.

11.2.2 Event 5151 / 97 / 9314

⚠ QUALIFIED PERSON

Event number:

Firmware version	Event number
< 3.4.20.R	9314
3.4.20.R	97 Example: 0x**01**97, 0x0001, 0x0000, 0x0000 Number of the battery module: 01
≥ 3.5.x.R	5151 or 151

Event message:

- **Battery overtemperature**

Explanation:

Overtemperature on a battery module

LED signal on battery module:

Red LED is flashing quickly.

Corrective measures:

- Disconnect the system (battery and inverter) from voltage sources.
- Check whether the MC4 connectors on all DC connections are correctly positioned.
- Wait until the operating temperature of the battery module is back within the specified range.
- If the error persists, contact Service.

11.2.3 Event 5152 / 98 / 9313

⚠ QUALIFIED PERSON

Event number:

Firmware version	Event number
< 3.4.20.R	9313
3.4.20.R	98 Example: 0x**01**98, 0x0001, 0x0000, 0x0000 Number of the battery module: 01
≥ 3.5.x.R	5152 or 152

Event message:

- **Battery system undertemperature**

Explanation:

Undertemperature during discharge of a battery module.

LED signal on battery module:

Red LED is flashing quickly.

Corrective measures:

- Wait until the operating temperature of the battery module is back within the specified range of -10°C to 50°C.
- If the error persists, contact Service.

11.2.4 Event 5153 / 99 / 9392

⚠ QUALIFIED PERSON

Event number:

Firmware version	Event number
< 3.4.20.R	9392
3.4.20.R	99 Example: 0x**01**99, 0x0001, 0x0000, 0x0000 Number of the battery module: 01
≥ 3.5.x.R	5153 or 153

Event message:

- **Overcurrent battery charging**

LED signal on battery module:

Red LED is flashing quickly.

Corrective measures:

- Disconnect the system (battery and inverter) from voltage sources.
- Restart system.
- If the error persists, contact Service.

11.2.5 Event 5154 / 9A / 9393

⚠ QUALIFIED PERSON

Event number:

Firmware version	Event number
< 3.4.20.R	9393
3.4.20.R	9A Example: 0x**01**9A, 0x0001, 0x0000, 0x0000 Number of the battery module: 01
≥ 3.5.x.R	5154 or 154

Event message:

- **Overcurrent battery discharging**

LED signal on battery module:

Red LED is flashing quickly.

Corrective measures:

- Disconnect the system (battery and inverter) from voltage sources.

- Restart system.
- If the error persists, contact Service.

11.2.6 Event 5155 / 9B / 9311

⚠ QUALIFIED PERSON

Event number:

Firmware version	Event number
< 3.4.20.R	9311
3.4.20.R	9B Example: 0x**01**9B, 0x0001, 0x0000, 0x0000 Number of the battery module: 01
≥ 3.5.x.R	5155 or 155

Event message:

- **Battery cell overvoltage fault**

Explanation:

Overvoltage on a battery module

LED signal on battery module:

Red LED is flashing quickly.

Corrective measures:

- Disconnect the system (battery and inverter) from voltage sources.
- Restart system.
- If the error persists, contact Service.

11.2.7 Event 5156 / 9C / 9312

⚠ QUALIFIED PERSON

Event number:

Firmware version	Event number
< 3.4.20.R	9312
3.4.20.R	9C Example: 0x**01**9C, 0x0001, 0x0000, 0x0000 Number of the battery module: 01
≥ 3.5.x.R	5156 or 156

Event message:

- **Battery cell undervoltage fault**

Explanation:

Undervoltage on a battery module

LED signal on battery module:

Red LED is flashing quickly.

Corrective measures:

- Close the DC switch on the battery.
- Restart the system (battery and inverter).
- If the error persists, contact Service.

11.2.8 Event 5157 / 9D / 9313

⚠ QUALIFIED PERSON

Event number:

Firmware version	Event number
< 3.4.20.R	9313
3.4.20.R	9D Example: 0x**01**9D, 0x0001, 0x0000, 0x0000 Number of the battery module: 01
≥ 3.5.x.R	5157 or 157

Event message:

- **Battery system undertemperature—charge**

Explanation:

Charging at low temperature

LED signal on battery module:

Red LED is flashing quickly.

Corrective measures:

- Wait until a permissible temperature range of 0°C to 50°C is reached.
- If the error persists at temperatures over 0°C, contact Service.

11.2.9 Event 5158 / 9E / 9347

⚠ QUALIFIED PERSON

Event number:

Firmware version	Event number
< 3.4.20.R	9347
3.4.20.R	9E Example: 0x**01**9E, 0x0001, 0x0000, 0x0000 Number of the battery module: 01
≥ 3.5.x.R	5158 or 158

Event message:

- **Battery is reporting event: 0x0X9E, 0x0001, 0x0000, 0x0000**

Explanation:

Communication fault between the battery modules.

LED signal on battery module:

Red LED is flashing slowly.

Corrective measures:

- Check the communication cable connection between the battery modules.
- Check whether the terminator is plugged in on the last module.
- If the error persists, contact Service.

11.2.10 Event 5159 / 9F / 9307

⚠ QUALIFIED PERSON

Event number:

Firmware version	Event number
< 3.4.20.R	9307
3.4.20.R	9F Example: 0x**01**9F, 0x0001, 0x0000, 0x0000 Number of the battery module: 01
≥ 3.5.x.R	5159 or 159

Event message:

- **Defective battery system**

Explanation:

Communication fault between the battery modules.

LED signal on battery module:

Red LED is flashing slowly.

Corrective measures:

- Check the communication wiring of the modules.
- Check whether the termination resistor has been plugged in on the last module.
- If the error persists, contact Service.

11.2.11 Event 5160 / A0 / 9347

⚠ QUALIFIED PERSON

Event number:

Firmware version	Event number
< 3.4.20.R	9347

Firmware version	Event number
3.4.20.R	A0 Example: 0x**01**A0, 0x0001, 0x0000, 0x0000 Number of the battery module: 01
≥ 3.5.x.R	5160 or 160

Event message:

- **Battery is reporting event: 0x0XA0, 0x0001, 0x0000, 0x0000**

Explanation:

The firmware versions are not consistent.

LED signal on battery module:

Red LED is flashing slowly.

Corrective measures:

- Connect each battery module to the inverter individually.
- Check for each individual battery module whether the current firmware version is installed.
- If the current firmware version is not installed for a battery module, perform a firmware update for this battery module. To do this, commission the inverter (see inverter manual). The firmware update of the battery module automatically starts approx. ten minutes after recommissioning the inverter.

11.2.12 Event 5161 / A1 / 9347

⚠ QUALIFIED PERSON

Event number:

Firmware version	Event number
< 3.4.20.R	9347
3.4.20.R	A1 Example: 0x**01**A1, 0x0001, 0x0000, 0x0000 Number of the battery module: 01
≥ 3.5.x.R	5161 or 161

Event message:

- **Battery is reporting event: 0x0XA1, 0x0001, 0x0000, 0x0000**

Explanation:

Multimaster error, communication at the CAN bus is disturbed

LED signal on battery module:

Red LED is flashing slowly.

Corrective measures:

- Connect each battery module to the inverter individually.
- Commission the inverter with each battery module individually (see inverter manual).
- Read the serial number of the respective battery modules via the user interface of the inverter.

- As soon as the serial numbers of all battery modules are known, contact Service.

11.2.13 Event 5162 / A2 / 9347

⚠ QUALIFIED PERSON

Event number:

Firmware version	Event number
< 3.4.20.R	9347
3.4.20.R	A2 Example: 0x**01**A2, 0x0001, 0x0000, 0x0000 Number of the battery module: 01
≥ 3.5.x.R	5162 or 162

Event message:

- **Battery is reporting event: 0x0XA2, 0x0001, 0x0000, 0x0000**

Explanation:

Error at the temperature sensor.

LED signal on battery module:

Red LED is flashing slowly.

LED signal on battery module:

Red LED is flashing slowly.

Corrective measures:

- Contact Service.

11.2.14 Event 5163 / A3 / 9347

⚠ QUALIFIED PERSON

Event number:

Firmware version	Event number
< 3.4.20.R	9347
3.4.20.R	A3 Example: 0x**01**A3, 0x0001, 0x0000, 0x0000 Number of the battery module: 01
≥ 3.5.x.R	5163 or 163

Event message:

- **Battery is reporting event: 0x0XA3, 0x0001, 0x0000, 0x0000**

Explanation:

Overtemperature semiconductor

Corrective measures:

- Wait until a permitted temperature has been reached.
- If the error persists at a permitted temperature, contact Service.

11.2.15 Event 5164 / A4 / 9347

⚠ QUALIFIED PERSON

Event number:

Firmware version	Event number
< 3.4.20.R	9347
3.4.20.R	A4 Example: 0x**01**A4, 0x0001, 0x0000, 0x0000 Number of the battery module: 01
≥ 3.5.x.R	5164 or 164

Event message:

- **Battery is reporting event: 0x0XA4, 0x0001, 0x0000, 0x0000**

Explanation:

Temperature sensor error semiconductor

Corrective measures:

- Contact Service.

11.2.16 Event 5165 / A5 / 9347

⚠ QUALIFIED PERSON

Event number:

Firmware version	Event number
< 3.4.20.R	9347
3.4.20.R	A5 Example: 0x**01**A5, 0x0001, 0x0000, 0x0000 Number of the battery module: 01
≥ 3.5.x.R	5165 or 165

Event message:

- **Battery is reporting event: 0x0XA5, 0x0001, 0x0000, 0x0000**

Explanation:

Fan error

LED signal on battery module:

Red LED is flashing slowly.

Corrective measures:

- Contact Service.

11.2.17 Event 5166 / A6 / 9351

⚠ QUALIFIED PERSON

Event number:

Firmware version	Event number
< 3.4.20.R	9351
3.4.20.R	A6 Example: 0x**01**A6, 0x0001, 0x0000, 0x0000 Number of the battery module: 01
≥ 3.5.x.R	5166 or 166

Event message:

- **Incorrect switch position for the battery disconnection point**

Explanation:

Error in internal battery disconnection point

LED signal on battery module:

Red LED is glowing continuously.

Corrective measures:

- Disconnect the system (battery and inverter) from voltage sources.
- Check the DC connection for correct polarity.
- Contact the Service.

11.2.18 Event 5167 / A7 / 9347

⚠ QUALIFIED PERSON

Event number:

Firmware version	Event number
< 3.4.20.R	9347
3.4.20.R	A7 Example: 0x**01**A7, 0x0001, 0x0000, 0x0000 Number of the battery module: 01
≥ 3.5.x.R	5167 or 167

Event message:

- **Battery is reporting event: 0x0XA7, 0x0001, 0x0000, 0x0000**

Explanation:

DC switch open

LED signal on battery module:

Red LED is glowing continuously.

Corrective measures:

- Switch off the DC circuit-breaker on the battery module.
- Stop and then restart the inverter.
- Wait a few seconds.
- Switch on the DC circuit-breaker on the battery module.
- If the error persists, contact Service.

11.2.19 Event 5168 / A8 / 9347

⚠ QUALIFIED PERSON

Event number:

Firmware version	Event number
< 3.4.20.R	9347
3.4.20.R	A8 Example: 0x**01**A8, 0x0001, 0x0000, 0x0000 Number of the battery module: 01
≥ 3.5.x.R	5168 or 168

Event message:

- **Battery is reporting event: 0x0XA8, 0x0001, 0x0000, 0x0000**

Explanation:

The battery voltage is too low during the precharge phase.

LED signal on battery module:

Red LED is glowing continuously.

Corrective measures:

- Switch off the DC circuit-breaker on the battery module.
- Stop and then restart the inverter.
- Wait a few seconds.
- Switch on the DC circuit-breaker on the battery module.
- If the error persists, contact Service.

11.2.20 Event 5169 / A9 / 9347

⚠ QUALIFIED PERSON

Event number:

Firmware version	Event number
< 3.4.20.R	9347

Firmware version	Event number
3.4.20.R	A9 Example: 0x**01**A9, 0x0001, 0x0000, 0x0000 Number of the battery module: 01
≥ 3.5.x.R	5169 or 169

Event message:

- **Battery is reporting event: 0x0XA9, 0x0001, 0x0000, 0x0000**

Explanation:

Voltage measurement error

LED signal on battery module:

Red LED is glowing continuously.

Corrective measures:

- Switch off the DC circuit-breaker on the battery module.
- Stop and then restart the inverter.
- Wait a few seconds.
- Switch on the DC circuit-breaker on the battery module.
- If the error persists, contact Service.

11.2.21 Event 5170/AA/9352

⚠ QUALIFIED PERSON

Event number:

Firmware version	Event number
< 3.4.20.R	9352
3.4.20.R	AA Example: 0x**01**AA, 0x0001, 0x0000, 0x0000 Number of the battery module: 01
≥ 3.5.x.R	5170 or 170

Event message:

- **Battery system short circuit**

LED signal on battery module:

Red LED is glowing continuously.

Corrective measures:

- Disconnect the battery and inverter from voltage sources.
- Check the DC connection for correct polarity.
- Contact Service.

11.2.22 Event 9399

⚠ QUALIFIED PERSON

Firmware version	Event number
< 3.4.20.R	9352
3.4.20.R	Message is not displayed.
≥ 3.5.x.R	Message is not displayed.

Explanation:

The cause must be determined by the Service.

Corrective measures:

- Contact Service.

11.3 Error with LED display only

If the red LED is flashing or glowing on one or more battery modules even though no event message is shown on the web interface of the hybrid inverter, the following information applies:

LED signal	Explanation	Corrective measure
The red LED is glowing	Error Operation of the battery has been stopped.	• Disconnect the system (battery and inverter) from voltage sources. • Contact Service.
Red LED is flashing (0.25 s on, 1.25 s off)	Internal battery alarm An alarm was triggered during operation. The battery keeps running, but the cause should be checked.	• Contact Service.

Also see:

- Disconnecting the battery modules from voltage sources ⇒ page 48

11.4 External appearance of the battery module

Changes to the external appearance of the battery modules can also indicate possible errors.

Status change of the battery module	Corrective measures
Discolorations, scratches or signs of wear on the enclosure	• Contact Service, if required.
Deformation of the battery enclosure	• Disconnect the system (battery and inverter) from voltage sources. • Contact Service.

Also see:

- Critical and non-critical battery modules ⇒ page 68
- Disconnecting the battery modules from voltage sources ⇒ page 48

12 Installation of an additional battery module

⚠ QUALIFIED PERSON

Deadline for the extension of the battery

An extension of the battery modules after two years is no longer possible since mixing used and new batteries can result in reduced power and even malfunctions.

In order to install an additional battery module after initial commissioning of the battery system, always proceed as described in this section.

Procedure:

1. Check whether the inverter is equipped with the firmware version required at a minimum (see technical information "Approved Batteries and Information on Battery Communication Connection" of the inverter).
2. If the inverter is not equipped with the firmware version required at a minimum, perform a firmware update of the inverter (see manual of the inverter).
   ☑ After the firmware update of the inverter, the firmware update of the battery follows automatically. This can take up to 10 minutes.
3. Select the menu **Events**.
4. Check the events to see whether the firmware update of the battery has been completed successfully (minimum firmware version of the battery: 1.1.19R).
5. Disconnect the battery modules from voltage sources (see Section 9, page 48).
6. Mount and connect the additional battery module.
7. Recommission the system with all battery modules.

Also see:

- Commissioning the battery modules ⇒ page 45
- Checking the configuration of the battery modules on the user interface of the inverter ⇒ page 47
- Modular extension of the battery modules ⇒ page 21
- Storage ⇒ page 67

13 Receipt of a Replacement Device

13.1 Procedure for Receiving a Replacement Device

This section describes the procedure for the electrical connection of the product. It provides an overview of the steps, which must be performed in the prescribed sequence.

Procedure		See
1.	Removing a Battery Module	Section 13.2, page 64
2.	Bring the battery modules to a state of charge of 30%	Section 13.3, page 64
3.	Installing a Battery Module	

Also see:

- Installing a Battery Module ⇒ page 65

13.2 Removing a Battery Module

1. Check whether the inverter is equipped with the firmware version required at a minimum (see technical information "Approved Batteries and Information on Battery Communication Connection" of the inverter).
2. If the inverter is not equipped with the firmware version required at a minimum, perform a firmware update of the inverter (see manual of the inverter).
   ☑ After the firmware update of the inverter, the firmware update of the battery follows automatically. This can take up to 10 minutes.
3. Select the menu **Events**.
4. Check the events to see whether the firmware update of the battery has been completed successfully (minimum firmware version of the battery: 1.1.19R).
5. Disconnect the battery modules from voltage sources (see Section 9, page 48).
6. Disconnect the terminals of the defective battery module.
7. Disassemble the defective battery module.
8. Store the defective battery module in a safe place (storage period: 30 calendar days). Observe the specifications for the storage of lithium-ion batteries.
9. If SMA Solar Technology AG requests the defective battery module for analysis, pack the defective battery module in the transport packaging of the replacement device and follow the specifications by SMA Solar Technology AG for returning the battery module.
10. If no request is made by SMA Solar Technology AG to return the defective battery module within the storage period, dispose of the defective battery module. Use the transport packaging of the replacement device.

13.3 Bring the battery modules to a state of charge of 30%

Exception for battery systems with STPx.0-3SE-40

Battery systems with STPx.0-3SE-40 require at least 2 operational battery modules for commissioning. Only for battery systems with STPx.0-3SE-40, the following measure applies:

- If, after disassembling the defective battery modules, only one battery module remains in the battery system, continue directly with assembling and connecting the new battery module.

Requirement:

☐ Removing the defective battery module is complete.

Procedure:

1. Recommission the system with the remaining battery modules.

2. Bring all remaining battery modules to a state of charge of 30%. To do this, determine the current state of charge via the user interface of the inverter and charge or discharge the battery depending on the current state of charge.
3. Disconnect the battery modules from voltage sources again (see Section 9, page 48).

13.4 Installing a Battery Module

Registration of the replacement device for the extended warranty required

To be able to use an extended warranty of ten years, the replacement module must be registered via the SMA product registration homepage (www.sma-service.com) upon receipt. The conditions of the SMA limited factory warranty apply. For further information, please visit www.SMA-Solar.com.

Requirements:

- ☐ Removing the defective battery module is complete.
- ☐ The state of charge of the remaining battery modules is at 30% (exception for battery systems with STPx.0-3SE-40).

Procedure:

1. Mount the new battery module.
2. Connect the new battery module.
3. Switch on the DC switch of the replacement device.
4. Commission the inverter and log into the user interface of the inverter as Installer.
5. Select the menu **Events**.
6. Check the events to see whether the firmware update of the battery has been completed successfully (minimum firmware version of the battery: 1.1.19R)
7. Switch on the DC switches of all battery modules.
8. Recommission the system with all battery modules.

14 Decommissioning the battery modules

⚠ QUALIFIED PERSON

To decommission the battery modules completely upon completion of their service life, disassemble the battery modules as described in the following.

Requirements:

- ☐ All circuit breakers of the battery modules are switched off.
- ☐ Original packaging or packaging suitable for the weight and dimensions of the battery modules is available.
- ☐ Mounting material for attaching the packaging on the Euro pallets is available (e.g., tie-down straps).

Procedure

1. Disconnect the battery modules from voltage sources (see Section 9, page 48).
2. Disconnect all DC and grounding cables.
3. Disconnect all communication cables.
4. If a fixing bracket is attached to the top battery module, detach and remove the fixing bracket (Torx M5).
5. Loosen the 2 screws (TX20) on the left and right on the top battery module that secure the battery module to the component below it. On the last battery module, if it is wall-mounted, 1 locking screw (TX20) is located below the battery module.
6. Pull the top battery module upwards.
7. If the battery module is to be stored or shipped, place it in packaging. Use the original packaging or packaging that is suitable for the weight and dimensions of the battery module and that complies with the regulations for the transport of batteries.
8. Disassemble the rest of the batteries, working from the top to the bottom. Proceed as described for the first battery module.
9. If modules are wall-mounted: detach all wall mounting brackets and connecting elements from top to bottom and remove.
10. Preparing battery modules for transport.

Also see:

- Storage ⇒ page 67
- Transport ⇒ page 22
- Disposal ⇒ page 68

15 Storage

15.1 Climatic requirements for the storage location

- Ambient temperature for short-term storage (less than one month): -20°C and 45°C
- Ambient temperature for long-term storage (more than one month): 0°C and 45°C
- Relative humidity, non-condensing: 5% to 95%
- Maximum altitude above MSL (Mean Sea Level): ≤ 2000 m

15.2 Procedure in case of fire

- In case of fire, call the fire department immediately. The storage room for lithium-ion batteries must be pointed out prior to their arrival.

16 Disposal

16.1 Critical and non-critical battery modules

The condition of a battery module after a status change or an error may be critical or non-critical. A qualified person must assess on site whether a battery module is critical or non-critical.

- Critical battery modules are potentially dangerous. The following symptoms serve as orientation:
  - The battery module has a notable smell, e.g. of plastic or gas.
  - Gases are leaking from the battery module.
  - The enclosure of the battery module is no longer closing properly and the inside of the battery module is visible.
  - The enclosure of the battery module is expanded or hot.
- Non-critical battery modules are battery modules, for example, whose storage capacity is no longer sufficient.

16.2 Providers for the disposal of batteries

The latest version of this document including the following table can be found in PDF format at www.SMA-Solar.com.

Country	Supplier	Procedure
Germany	GRS Batterien: www.grs-batterien.de SMA Solar Technology AG is cooperating with the Stiftung Gemeinsames Rücknahmesystem Batterien (Foundation Joint Collection Scheme for Batteries, known as GRS Batterien) for the disposal of old lithium-ion batteries. All batteries put on the market by SMA Solar Technology AG can be disposed of via GRS Batterien.	As a battery installer, you are obliged to take back and dispose of this battery. After registering on the website of **GRS Batterien** and your registration as a disposal point, batteries can be collected at your location according to the Batteriegesetz (BattG)/ Batteries Act.
Italy	SMA Solar Technology AG: logistica@sma-italia.com	As an end user, please contact your installer for more information on proper battery disposal. As an installer, please contact the e-mail address provided for more information on proper battery disposal.
Australia, Austria, Belgium, Czech Republic, Denmark, Finland, France, Hungary, Netherlands, New Zealand, Poland, Portugal, Romania, Spain, Sweden, Switzerland	-	As an end user, please contact your installer for more information on proper battery disposal. As an installer, please contact your distributor for more information on proper battery disposal. As a distributor, you are obliged to take back and dispose of this battery.

16.3 Specifications for Battery Disposal

Batteries from PV systems can only be returned via specialist dealers. The special disposal conditions for lithium batteries must be observed. Just like all other batteries, lithium-ion batteries must under no circumstances be disposed of with residual waste. Please note the regulations for the disposal of old batteries that apply at the time of disposal:

- There is a legal obligation to return used batteries. Batteries must not be disposed of with household waste.

- Used batteries may contain harmful substances which may harm the environment or your health if not properly stored or disposed of.
- Batteries contain important raw materials, such as iron, zinc, manganese, copper, cobalt, or nickel, and can be recycled.
- Batteries may only be disposed of in accordance with the local regulations for used batteries valid at the time of disposal.
- Dangerous goods must be packed, transported and labeled for Europe in accordance with the regulations of the European Agreement concerning the International Carriage of Dangerous Goods by Road (ADR).
- Regional providers for the disposal of used batteries must be contacted.

Also see:

- Transport ⇒ page 22
- Providers for the disposal of batteries ⇒ page 68

16.4 Reporting damaged battery

- If a battery is damaged, immediately contact the installer or sales partner.

16.5 Disposing of the Battery

⚠ QUALIFIED PERSON

1. Immediately decommission the battery if damaged.
2. To avoid short circuits and a possible fire, the poles, loose cables and cable ends must be covered. To do this, use suitable insulation material (e.g. provided filler plugs or adhesive tape).
3. Ensure that the battery is not exposed to moisture or direct sunlight.
4. Ensure that defective batteries are taken away as quickly as possible.

17 Technical Data

17.1 General Data

	SMA Home Storage
Width x height x depth of a battery module	610 mm x 483 mm x 214.6 mm
Height of 1/2/3 battery modules (mounted together)	483 mm/969 mm/1455 mm
Additional height with base	106 mm
Depth of the battery modules when set up back-to-back	466 mm
Operating temperature during charging	0°C to 50°C
Operating temperature during discharging	-10°C to +50°C
Weight of battery module	38 kg
Maximum installation height above MSL	2000 m
Self-consumption per module	2 W
Degree of protection (according to IEC 60529)	IP65
Protection class (according to IEC 62109-1)	I
Warranty when registering[1)]	10 years
Warranty (without registration)	2 years
Performance warranty[2)]	12 years
Registration number of the Stiftung Elektro-Altgeräte Register (EAR)	65232744
Recycling	Section 16, page 68
Certificates and approvals (more available on request)	CE, UN 38.3, IEC 62619, IEC 62477, VDE 2510-50
Cell technology	Lithium Iron Phosphate (LiFePO4)

17.2 Equipment

	SMA Home Storage 3.28	SMA Home Storage 6.56	SMA Home Storage 9.84	SMA Home Storage 13.12	SMA Home Storage 16.40
Type designation	HS-BM-3.28-10	2 × HS-BM-3.28-10	3 ×HS-BM-3.28-10	4 ×HS-BM-3.28-10	5 ×HS-BM-3.28-10
DC connection	MC4				
Communication terminal	RJ45				
Communication protocols	SMA battery interface				

1) Device registration via the SMA product registration homepage (www.sma-service.com) within 30 days. The conditions of the SMA limited factory warranty apply. For further information, please visit www.SMA-Solar.com

2) When observing the operating temperature

	SMA Home Storage 3.28	SMA Home Storage 6.56	SMA Home Storage 9.84	SMA Home Storage 13.12	SMA Home Storage 16.40
Country availability of SMA Smart Connected	AT, BE, CH, DE, NL, IT				
Compatible with STPx.0-3SE-40	no	yes	yes	yes	yes
Compatible with SB-SExx-50	yes	yes	yes	yes	no

17.3 DC connection

	SMA Home Storage 3.28	SMA Home Storage 6.56	SMA Home Storage 9.84	SMA Home Storage 13.12	SMA Home Storage 16.40
Type designation	HS-BM-3.28-10	2 × HS-BM-3.28-10	3 ×HS-BM-3.28-10	4 ×HS-BM-3.28-10	5 ×HS-BM-3.28-10
Usable energy capacity[3)]	3.28 kWh	6.56 kWh	9.84 kWh	13.12 kWh	16.40 kWh
Nominal voltage	96 V	192 V	288 V	384 V	480 V
Operating voltage range	90 V to 108 V	180 V to 216 V	270 V to 324 V	360 V to 432 V	450 V to 540 V
Max. charging / discharging current	36 A				

17.4 Efficiency

	SMA Home Storage 3.28	SMA Home Storage 6.56	SMA Home Storage 9.84	SMA Home Storage 13.12	SMA Home Storage 16.40
Maximum battery efficiency	94.5 %	94.5 %	94.5 %	94.5 %	94.5 %

17.5 Protective Devices

	SMA Home Storage
Input-side disconnection point	Available
DC reverse polarity protection	Available
Overvoltage category battery / inverter	II / II

17.6 Climatic Conditions

	SMA Home Storage
Operating temperature during charging	0°C to 50°C
Operating temperature during discharging	-10°C to +50°C

[3)] At 100% DoD, 4 h long charge/discharge at +25°C

	SMA Home Storage
Humidity (non-condensing)	5% to 95%
Cooling concept	Passively via enclosure with interior fan

18 Accessories

Designation	Short designation	SMA order number
Base unit HS-BU-10	Base for floor-mounted SMA Home Storage (optional)	HS-BU-10
Communication cable to the STPx.0-3SE-40	Battery data cable for the connection between the SMA Home Storage and Sunny Tripower Smart Energy This battery data cable has an RJ45 and a COM connector.	HS-COM-CBL-3-10
SMA Home Storage Top Cover	Cover for the top battery module (optional)	HS-TC-10

19 EU Declaration of Conformity

within the scope of the EU directives

- Electromagnetic compatibility 2014/30/EU (29.3.2014 L 96/79-106) (EMC)
- Low Voltage Directive 2014/35/EU (29.3.2014 L 96/357-374) (LVD)
- Restriction of the use of certain hazardous substances 2011/65/EU (L 174/88, June 8, 2011) and 2015/863/EU (L 137/10, March 31, 2015) (RoHS)

SMA Solar Technology AG confirms herewith that the products described in this document are in compliance with the fundamental requirements and other relevant provisions of the aforementioned directives. More information on the availability of the entire Declaration of Conformity can be found at https://www.sma.de/en/ce-ukca.

20 UK Declaration of Conformity

according to the regulations of England, Wales and Scotland

- Electromagnetic Compatibility Regulations 2016 (SI 2016/1091)
- Electrical Equipment (Safety) Regulations 2016 (SI 2016/1101)
- The Restriction of the Use of Certain Hazardous Substances in Electrical and Electronic Equipment Regulations 2012 (SI 2012/3032)

SMA Solar Technology AG confirms herewith that the products described in this document are in compliance with the fundamental requirements and other relevant provisions of the above-mentioned regulations. More information on the availability of the entire declaration of conformity can be found at https://www.sma.de/en/ce-ukca.

SMA Solar UK Ltd.

Countrywide House

23 West Bar, Banbury

Oxfordshire, OX16 9SA

United Kingdom

21 Contact

If you have technical problems with our products, please contact the SMA Service Line. The following data is required in order to provide you with the necessary assistance:

- Device type
- Serial number
- Firmware version
- Event message
- Mounting location and mounting height
- Type of the communication products connected
- Use the name of the system in Sunny Portal (if available)
- Access data for Sunny Portal (if available)
- Special country-specific settings (if available)
- Information on the ripple control receiver (if available)
- Detailed description of the problem

You can find your country's contact information at:

ENERGY
THAT
CHANGES

SMA

www.SMA-Solar.com