CONTACT

If you have technical problems, first contact your installer. The following information is required in order to provide you with the necessary assistance:

- Inverter device type
- Inverter serial number
- Type and number of PV modules connected
- Event number or display message on the inverter
- Optional equipment (e.g. communication products)

SMA Solar Technology AG
Sonnenallee 1
34266 Niestetal, Germany
www.SMA.de

SMA Service Line
Inverters: +49 561 9522 1499
Communication: +49 561 9522 2499
Fax: +49 561 9522 4699
E-Mail: Serviceline@SMA.de

Installer Contact

PV Inverter

SUNNY TRIPOWER 8000TL/10000TL/12000TL/15000TL/17000TL

User Manual

STP8-17TL-BA-en-40 | IMEN-STP10-17TL | Version 4.0

EN

EXPLANATION OF SYMBOLS

Symbols on the Inverter

Operation display

Bluetooth® Wireless Technology. *Bluetooth* communication active.*

An error has occurred. Inform your installer **immediately**.

There are special requirements for earthing.

Symbols on the Type Label

Beware of dangerous voltage.
The inverter operates at high voltages. Any electrical work on the inverter must be carried out by electrically qualified persons only.

Beware of hot surface.
The inverter can become hot during operation. Avoid contact during operation.

Observe enclosed documentation.

The inverter must not be disposed of together with household waste.
Further disposal information can be found in the enclosed installation manual.

CE marking: The inverter complies with the requirements of the applicable EC directives.

RAL quality mark for solar products: The inverter complies with the requirements of the German Institute for Quality Assurance and Labelling.

Device class label: The inverter is equipped with a wireless component that complies with the harmonised standards.

Certified safety: The inverter complies with the requirements of the European Equipment and Product Safety Act.

N23114 Australian mark of conformity

Korean mark of conformity

Direct current (DC)

AC 3N Three-phase alternating current (AC) with neutral conductor

The inverter is protected against dust intrusion and water jets from any angle.

The inverter does not have a transformer.

* The *Bluetooth*® word mark and logos are registered trademarks owned by Bluetooth SIG, Inc. and any use of these marks by SMA Solar Technology AG is under licence.

VISUAL INSPECTION, MAINTENANCE AND CLEANING

Visual Inspection
Check the inverter and cables for any visual signs of external damage. Contact your installer if you find any damage. Do not perform any repair work yourself.

Maintenance and Cleaning
If the inverter is dirty and the visibility of the operating data and operating states of the inverter is limited, clean the enclosure lid, the display and the LEDs with a damp cloth. Do not use any corrosive substances (e.g. solvents or abrasives) for cleaning.
Ask your installer to check for correct inverter operation at regular intervals.

GLOSSARY

AC
Abbreviation for "Alternating Current".

Bluetooth
Bluetooth is a radio technology that allows the inverter and other communication products to communicate with each other. *Bluetooth* communication does not require line of sight between the devices.

DC
Abbreviation for "Direct Current".

Electronic Solar Switch (ESS)
The Electronic Solar Switch is part of the DC disconnection unit of the inverter. The Electronic Solar Switch must be securely inserted into the bottom of the inverter and may only be removed by a skilled person.

Energy
Energy is measured in Wh (watt hours), kWh (kilowatt hours) or MWh (megawatt hours). The energy is the power calculated over time. If, for example, your inverter operates at a constant power of 3,000 W for half an hour and then at a constant power of 2,000 W for another half an hour, it has fed 2,500 Wh of energy into the power distribution grid within that hour.

Power
Power is measured in W (watts), kW (kilowatts) or MW (megawatts). Power is an instantaneous value. It displays the power your inverter is currently feeding into the power distribution grid.

PV
Abbreviation for photovoltaics.

SAFETY PRECAUTIONS

DANGER!

Electric shock caused by high voltage in the inverter

Do not open the inverter!

Even when no external voltage is present, there can still be high voltages in the inverter.

- Electrical installation, repair and modification may only be carried out by a trained electrically skilled person:

WARNING!

New safety concept

If the Sunny Tripower beeps, it has detected a fault in the PV array and short-circuited the PV array. The PV plant is now in a safe state.

- On no account disconnect the Electronic Solar Switch or the DC connector.
- Contact your installer immediately to remedy the fault.

CAUTION!

Risk of burns through contact with the enclosure during operation

- Do not touch any parts of the inverter during operation except the lower lid and display.

PRODUCT OVERVIEW

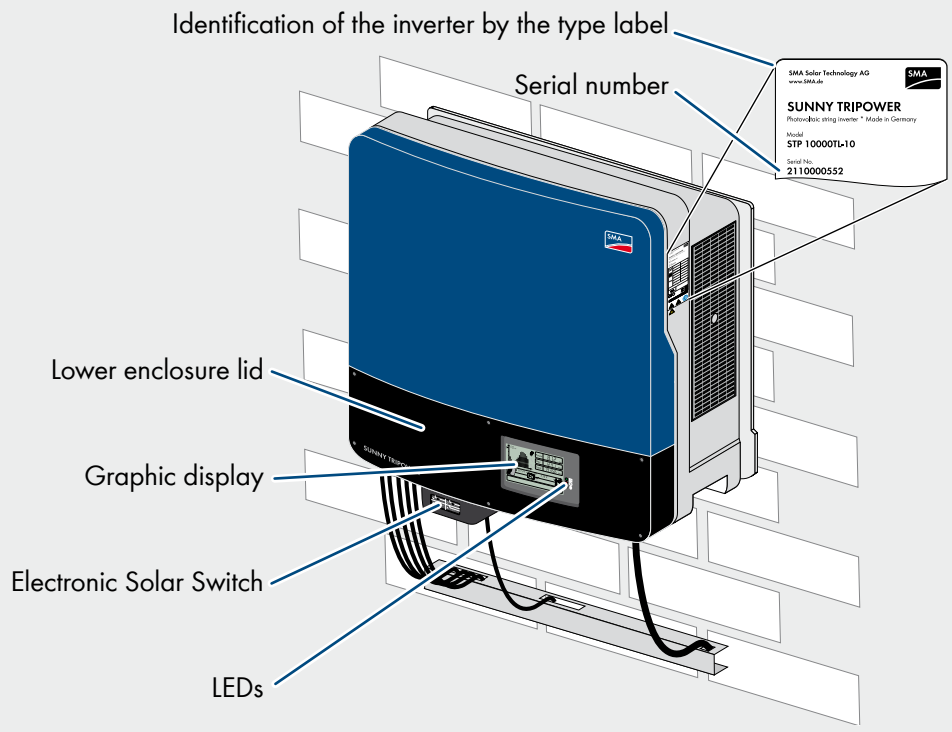

GRAPHIC DISPLAY

The display updates the values of your PV plant every five seconds.

You can operate the display by tapping the lower enclosure lid:

- Tapping the enclosure lid once: to activate the backlight, to switch between the power range of the past 16 feed-in hours and the energy yields of the past 16 days, to switch to the next text line.
- Tapping the enclosure lid twice (valid as of firmware version 2.31): the inverter shows, in succession, the firmware version, the serial number and designation of the inverter, the *Bluetooth* NetID, and the specified country standard and display language.

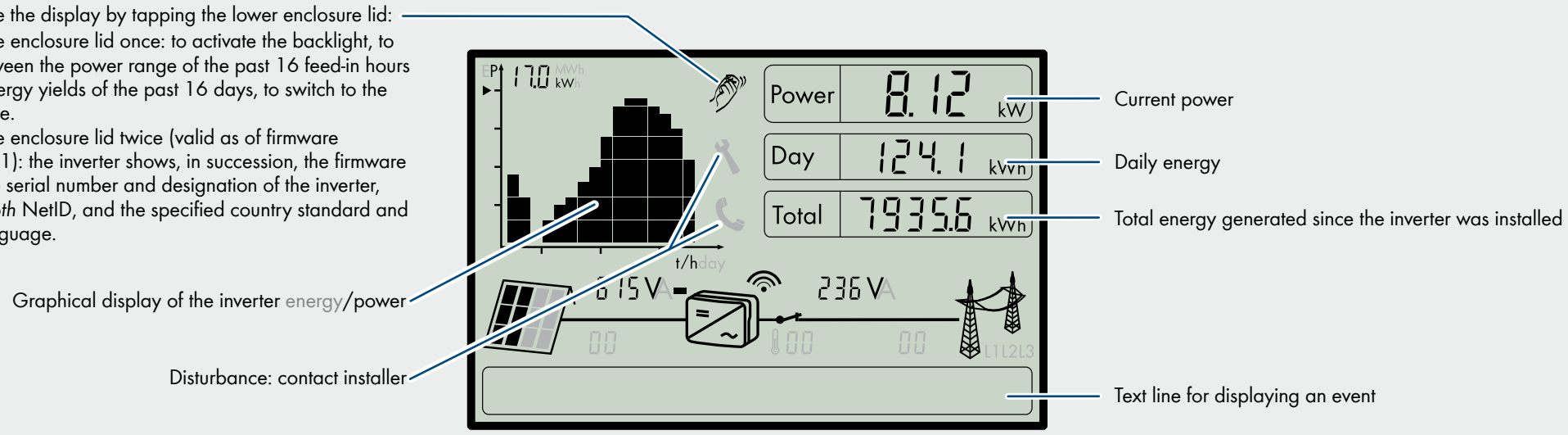

PLANT OVERVIEW

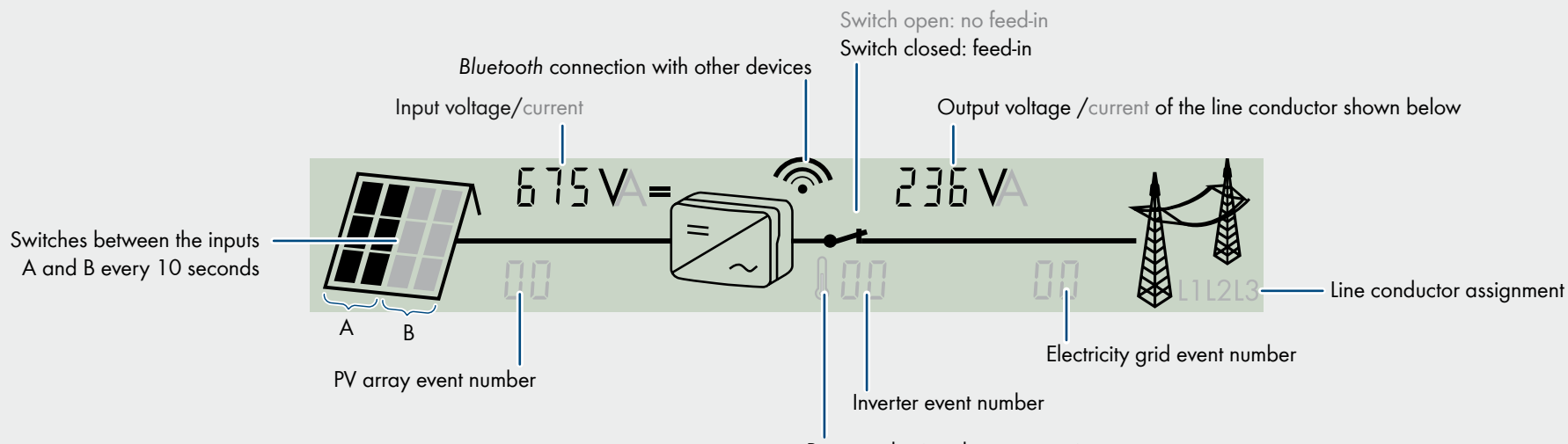

Power reduction due to excessive temperature

- If the symbol is frequently displayed, contact your installer.

GRAPH

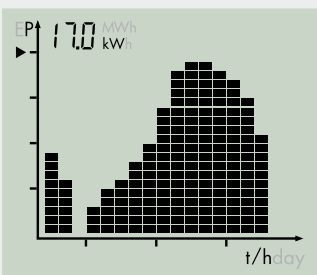

The inverter energy and/or power is shown as a graph on the display. The daily graph is displayed by default. The right-hand flashing bar of the graph represents the current hour. If the inverter does not feed any current to the electricity grid over a longer period of time (e.g. during the hours of darkness or if the PV modules are covered with snow), a gap is inserted into the chart. The bar for the current hour is updated automatically every five seconds.

After four seconds, the bar goes off for one second and then displays the current value.

POWER DISPLAY

The power and energy of the inverter are displayed in three fields: **Power**, **Day** and **Total**. The display is updated every five seconds.

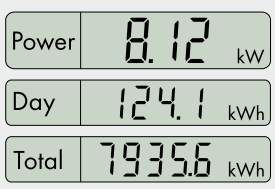

Power

The power that the inverter is currently feeding into the electricity grid.

Day

The energy fed into the electricity grid on this particular day. This equals the energy generated from the inverter's start-up in the morning to the current time.

Total

The total energy that the inverter has fed into the electricity grid during its entire operating time.

MEASUREMENT ACCURACY

The display values may deviate from the actual values and must not be used for billing purposes. The inverter's measured values are required for the operational control and to control the current to be fed into the electricity grid. The inverter does not have a calibrated meter.

LED SIGNALS

Green LED is on:	Operation
Green LED is flashing:	Waiting for sufficient irradiation
Red LED is on:	Disturbance: contact installer.
Blue LED is on:	*Bluetooth* communication is active. The inverter can communicate with other SMA *Bluetooth* devices with identical NetID.