Technical Information

Grounding in Off-Grid Systems

Design of TN and TT Off-Grid Systems

In off-grid systems with Sunny Island, the stand-alone grid distributes the energy. AC loads draw energy from the stand-alone grid and AC sources (e.g. PV inverters) feed in energy. Distribution grids can be designed differently. The grid configuration of the distribution system determines how it is grounded.

This technical information gives an overview of the following topics:

- Grid configurations of stand-alone grids with Sunny Island
- Ground electrode connection
- Required protective devices for personal protection

This document does not replace any locally applicable standards or directives.

1 Grid Configurations in Off-Grid Systems with Sunny Island

The grid configuration of the distribution system determines how it is grounded. Personal protection is the purpose of grounding in all grid configurations. Under fault conditions no dangerous voltages may occur on exposed components. A slight transition resistance from the ground electrode to ground is crucial in all grid configurations.

TN System

The most common grid configuration is the TN system (French: Terre Neutre). Here, the neutral point of the source is grounded. The neutral conductor of the system is connected to this neutral point. The exposed conductive parts of the connected loads are connected with the grounded neutral point of the source via protective conductors. A distinction is made between the TN-C system (French: Terre Neutre Combiné) and the TN-S system (French: Terre Neutre Séparé).
In the TN-C system the PEN conductor is a combination of the grounding conductor and the neutral conductor.
In the TN-S system the neutral conductor and the grounding conductor are separate.

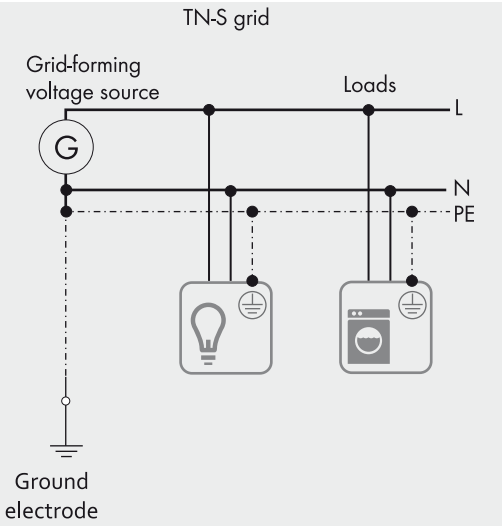

Figure 1: Schematic diagram of a TN-S system

A hybrid form is common in extended utility grids with the TN-C system being used from the source while the TN-S system is limited to the load system. This form is known as TN-C-S system (French: Terre Neutre Combiné Séparé).

Advantages of the TN system:

- Low-resistance protective connections allow for a reliable execution of simple protective measures under fault conditions.

  Circuit breakers automatically disconnect the voltage source from the distribution grid under fault conditions.
- Only one ground electrode is required.

The TN-S system is thus the preferred grid configuration for a new off-grid system.

TT System

In a TT system (French: Terre Terre), the neutral point of the source is grounded, as it is in TN systems. However, the exposed conductive parts of the loads are connected to separate ground electrodes of the system using protective conductors. The neutral conductor must not be grounded in the load system. This grid configuration has no direct grounding conductor connection between the exposed conductive parts of the equipment and the neutral point of the source. This is only possible when connected to ground. The connection to ground cannot reliably trigger a circuit breaker under fault conditions. Therefore, residual-current devices are required in TT systems.

Grid Configuration for Stand-Alone Grids

Stand-alone grids with Sunny Island can be designed as TN-S systems, TN-C-S systems or TT systems. At least one ground electrode must be present in all grid configurations. This is in any case necessary for the equipotential bonding of the electrical system.

2 TN-S Off-Grid System without Generator

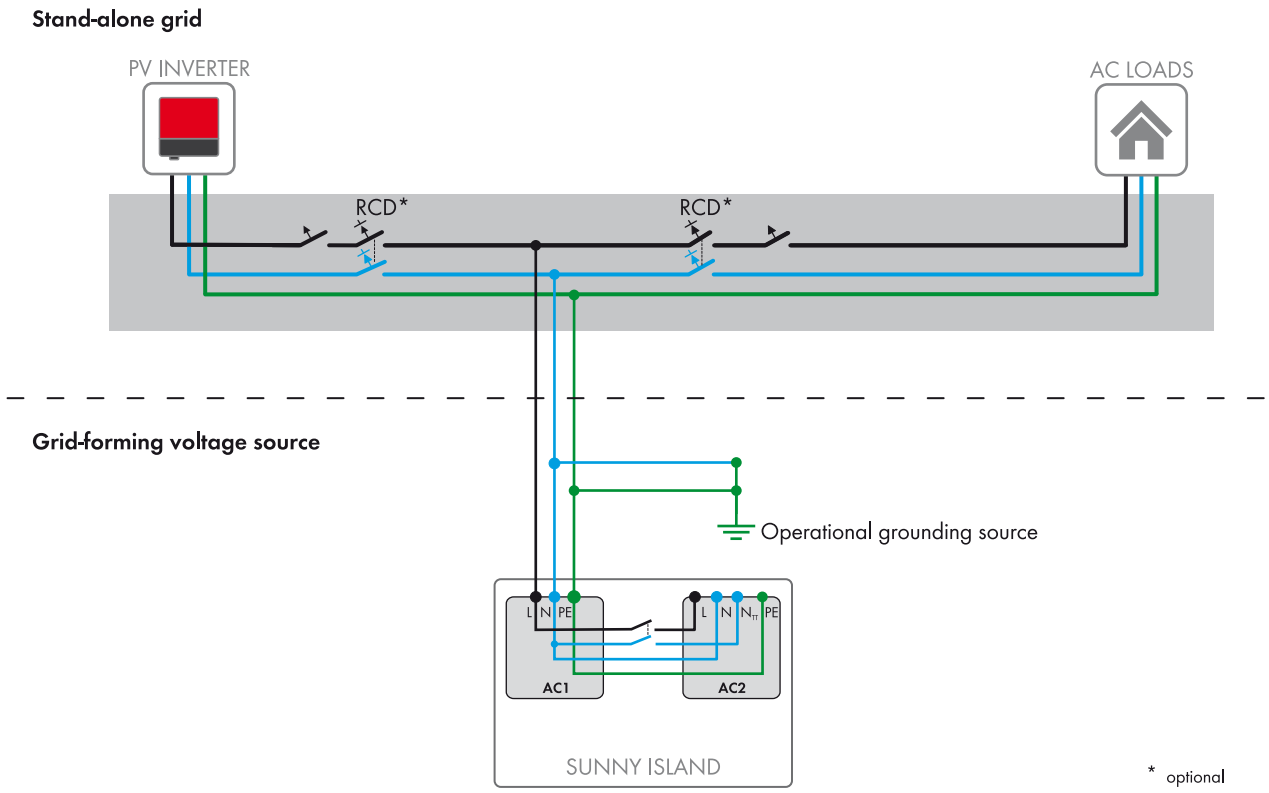

Figure 2: Grounding in the TN-S off-grid system without generator

	Grid-forming voltage source	Stand-alone grid
Device	• Sunny Island	• PV inverters • AC loads
Grounding	• Electrically conductive enclosure parts must be grounded at the operational grounding electrode. • The neutral conductor must be grounded in the vicinity of the Sunny Island at the operational grounding electrode.	• Electrically conductive enclosure parts must be grounded at the operational grounding electrode.
Protective devices	–	• You must install a circuit breaker in each final circuit. Circuit breakers that the Sunny Island can trigger at the maximum: trigger characteristic B6 (SI3.0M-11 and SI4.4M-11) or trigger characteristic B16/C6 (SI6.0H-11 and SI8.0H-11).

3 TN-S Off-Grid System with Generator

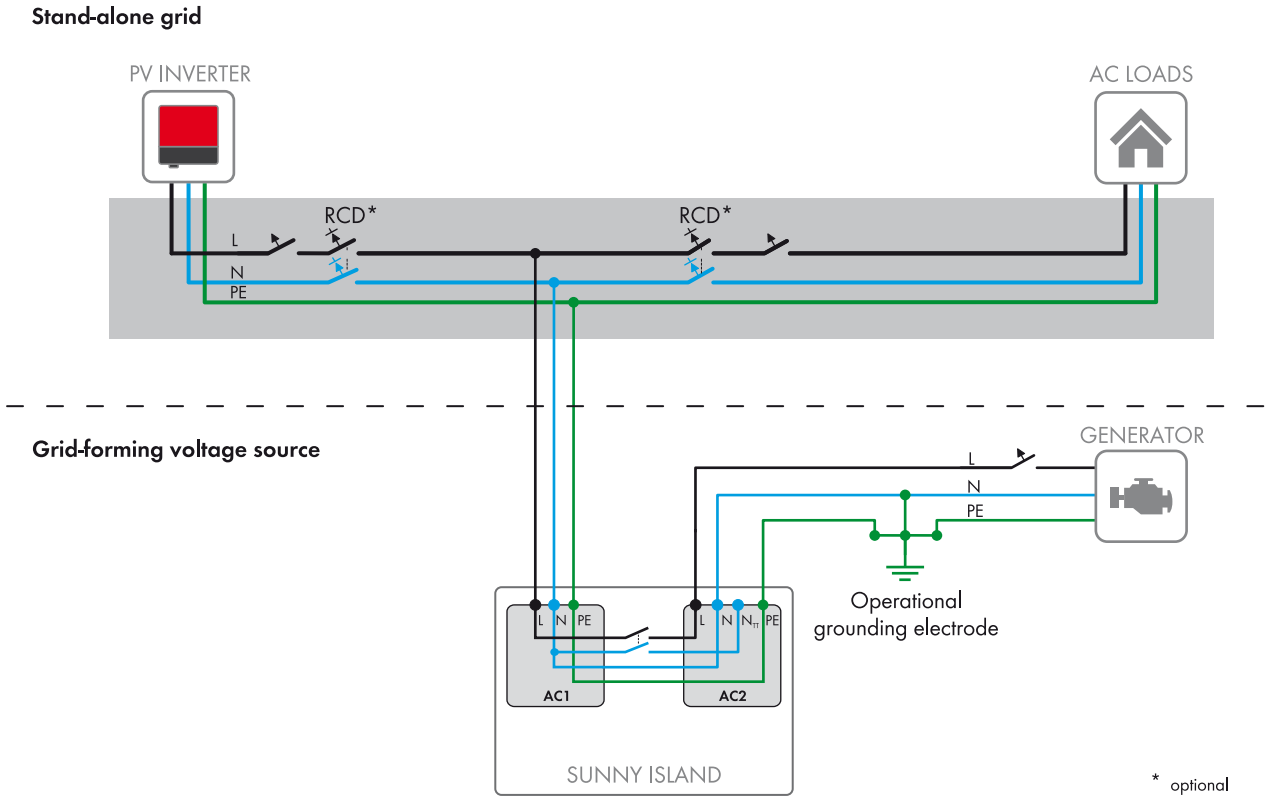

Figure 3: Grounding in the TN off-grid system with generator

	Grid-forming voltage source	Stand-alone grid
Device	• Sunny Island • Generator	• PV inverters • AC loads
Grounding	• Ground electrically conductive enclosure parts at the operational grounding electrode. • Ground the neutral conductor in the vicinity of the Sunny Island at the operational grounding electrode.	• Ground electrically conductive enclosure parts at the operational grounding electrode.
Protective devices	• Install a circuit breaker in the line conductor at terminal **AC2** in the vicinity of the generator. The circuit breaker must be configured for the conductor cross-section, the generator current and the maximum current at terminal **AC2** of the Sunny Island inverter.	• Install a circuit breaker in each final circuit. Circuit breakers that the Sunny Island can trigger at the maximum: trigger characteristic B6 (SI3.0M-11 and SI4.4M-11) or trigger characteristic B16/C6 (SI6.0H-11 and SI8.0H-11). If the circuit breaker cannot be triggered by the Sunny Island, you must also install a residual-current device (type A).

4 TT Off-Grid System without Generator

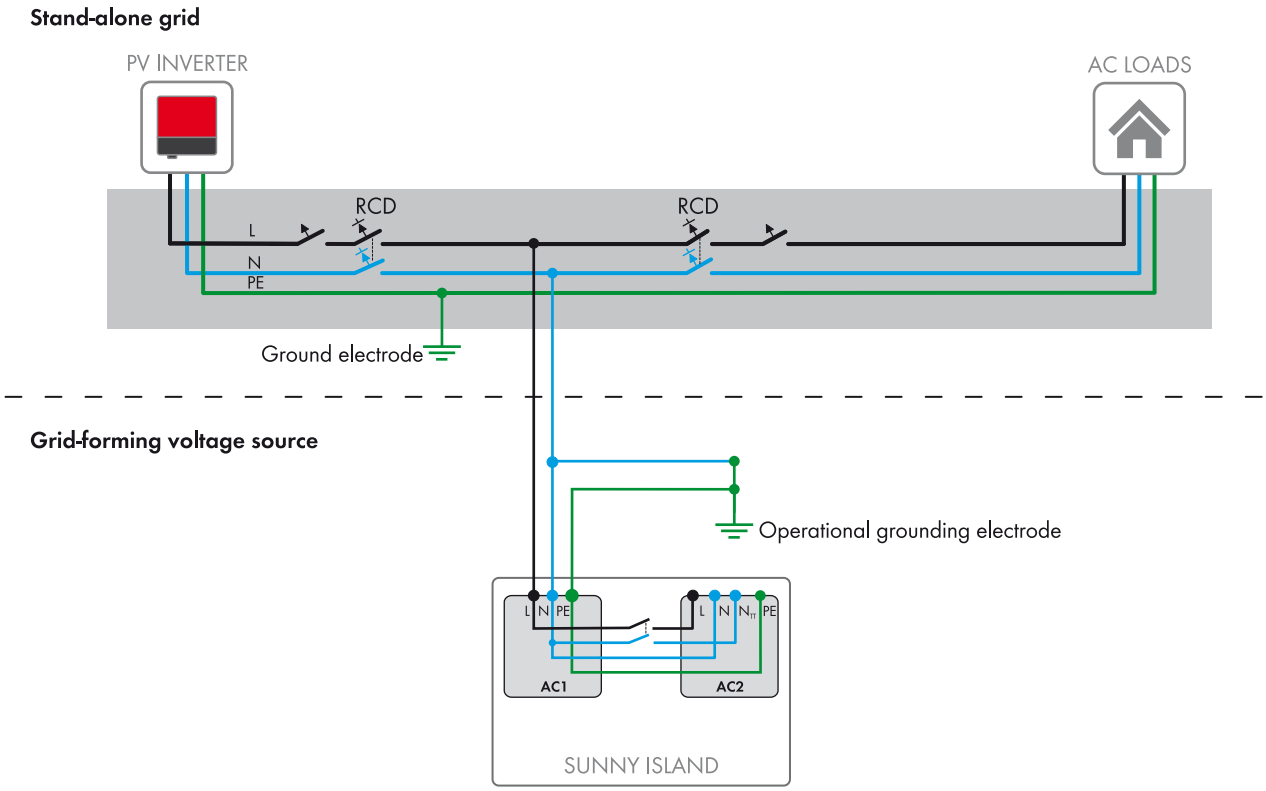

Figure 4: Grounding in the TT off-grid system without generator

	Grid-forming voltage source	Stand-alone grid
Device	• Sunny Island	• PV inverters • AC loads
Grounding	• Ground electrically conductive enclosure parts at the operational grounding electrode. • Ground the neutral conductor in the vicinity of the Sunny Island at the operational grounding electrode.	• Ground electrically conductive enclosure parts at a ground electrode.
Protective devices	–	• In each final circuit, a circuit breaker and a residual-current device (type A) must be installed.

5 TT Off-Grid System with Generator

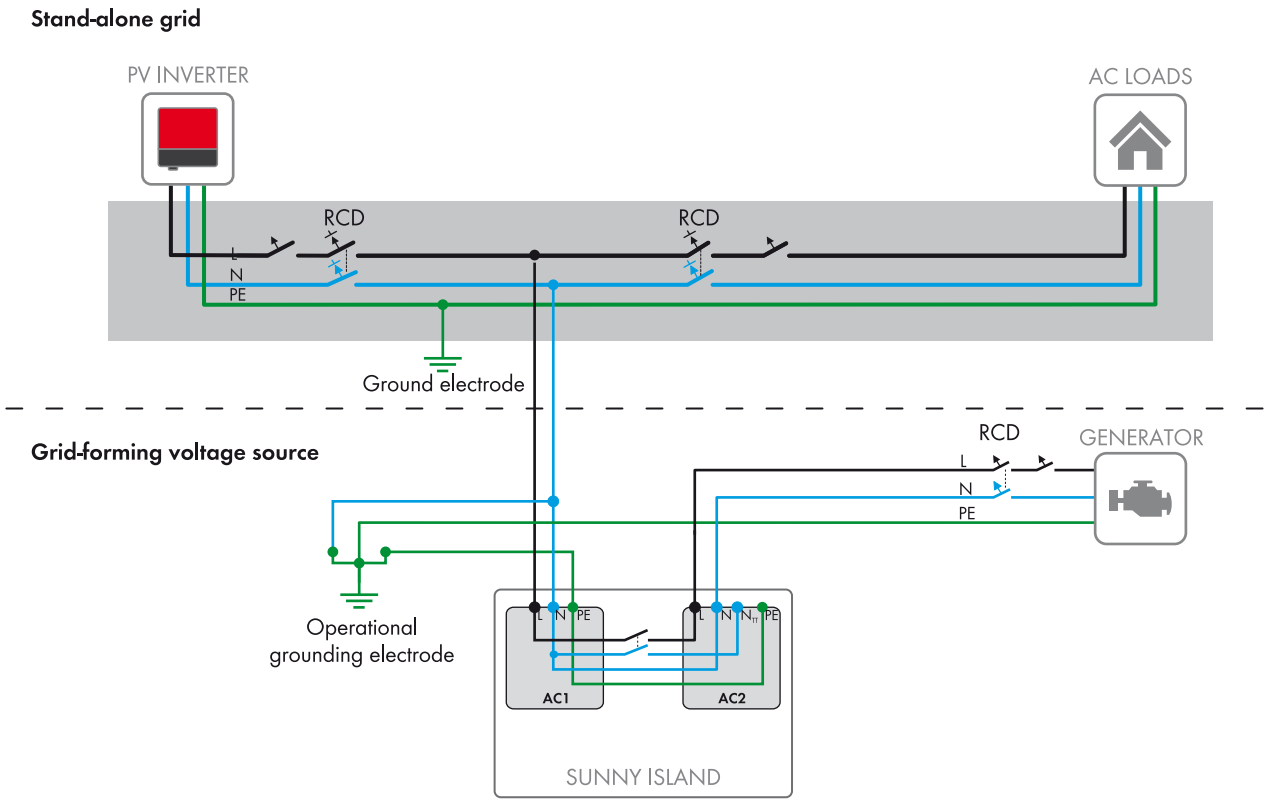

Figure 5: Grounding in the TT off-grid system with generator

	Grid-forming voltage sources	Stand-alone grid
Device	• Sunny Island • Generator	• PV inverters • AC loads
Grounding	• Electrically conductive enclosure parts must be grounded at the operational grounding electrode. • The neutral conductor must be grounded in the vicinity of the Sunny Island at the operational grounding electrode. • Make sure that there is no connection between the neutral conductor and the grounding conductor at the generator.	• Electrically conductive enclosure parts must be grounded by means of a ground electrode.
Protective devices	• Install a circuit breaker and a residual-current device in the line conductor at terminal **AC2** in the vicinity of the generator. The circuit breaker must be configured for the conductor cross-section, the generator current and the maximum current at terminal **AC2** of the Sunny Island inverter.	• In each final circuit, a circuit breaker and a residual-current device (type A) must be installed.